OWNER'S OPERATING & INSTALLATION MANUAL

CTX Electric Ovens
DZ26T/DZ33T/DZ55T-Series

Combinations:

- Single Oven
- Double Oven (Two-Stack)
- Triple Oven (Three-Stack)
- Quad Oven (Four-Stack, DZ33T & DZ55T Only)

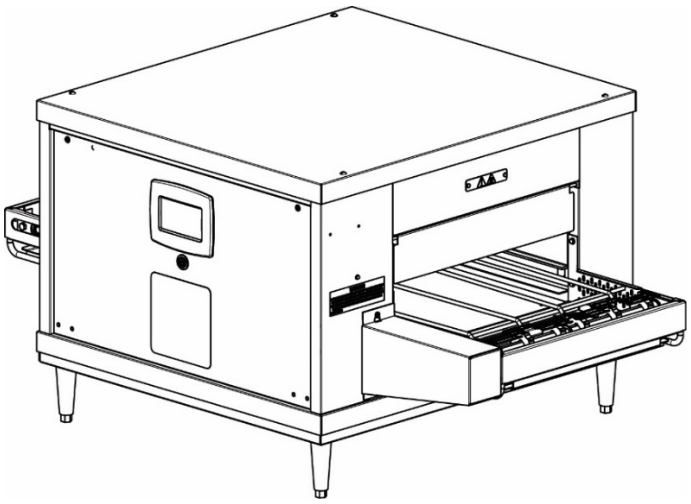

© 2023 Middleby Marshall Inc.

is a registered trademark of Middleby Marshall, Inc. All rights reserved.

P/N 77267 rev E

NOTICE:

This Owner's Operating and Installation Manual should be given to the user. The operator of the oven should be familiar with the function and operation of the oven.

This manual must be kept in a prominent, easily reachable location near the oven.

Middleby Marshall suggests a service contract with a Middleby Authorized Service Agent (ASA).

DEFINITIONS

DANGER

INDICATES A HAZARDOUS SITUATION THAT, IF NOT AVOIDED, WILL RESULT IN DEATH OR SERIOUS INJURY.

WARNING

Indicates a hazardous situation that, if not avoided, could result in death or serious injury.

CAUTION

Indicates a hazardous situation that, if not avoided, could result in minor or moderate injury.

NOTICE

Indicates situations not related to physical injury that, if not avoided, could cause damage to the machine or surrounding property and could affect warranty coverage.

IMPORTANT

Includes other information required by the operator or installer.

WARNING

This appliance is not intended for use by persons (including children) with reduced physical, sensory or mental capabilities, or lack of experience and knowledge, unless they have been given supervision or instruction concerning use of the appliance by a person responsible for their safety.

• Children should be supervised to ensure that they do not play with the appliance.

• Cleaning and user maintenance shall not be made by children without supervision.

WARNING

For your safety, do not store or use gasoline or other flammable vapors and liquids in the vicinity of this or any other appliance.

WARNING

Improper installation, adjustment, alteration, service, or maintenance can cause property damage, injury, or death. Read the installation, operation, and maintenance instructions thoroughly before installing or servicing the equipment.

IMPORTANT

An electrical wiring diagram for the oven is located inside the machinery compartment.

IMPORTANT

It is the customer's responsibility to report any concealed or non-concealed damage to the freight company. Retain all shipping materials until it is certain that the equipment has not suffered concealed shipping damage.

NOTICE

Contact your Middleby Authorized Service Agent to install and perform maintenance and repairs. An authorized service agency directory is supplied with your oven and available here: https://middlebymarshall.com

NOTICE

Using parts other than genuine Middleby Marshall Factory manufactured parts relieves the manufacturer of all warranty and liability.

NOTICE

Middleby Marshall (Manufacturer) reserves the right to change specifications at any time.

NOTICE

The equipment warranty is not valid unless the oven is installed, started, and demonstrated under the supervision of a factory certified installer.

NOTICE

The equipment is only for professional use and shall be used by qualified personnel.

NOTICE

These appliances are intended to be used for commercial applications, for example in kitchens of restaurants, canteens, hospitals and in commercial enterprises such as bakeries, butcheries, etc., but not for continuous mass production of food.

NOTICE

The working height of the oven is not to exceed 1.6m above the floor.

RETAIN THIS MANUAL FOR FUTURE REFERENCE

MIDDLEBY MARSHALL NO QUIBBLE LIMITED WARRANTY (U.S.A. ONLY)

MIDDLEBY MARSHALL HEREINAFTER REFERRED TO AS "THE SELLER", WARRANTS EQUIPMENT MANUFACTURED BY IT TO BE FREE FROM DEFECTS IN MATERIAL AND WORKMANSHIP FOR WHICH IT IS RESPONSIBLE. THE SELLER'S OBLIGATION UNDER THIS WARRANTY SHALL BE LIMITED TO REPLACING OR REPAIRING AT SELLER'S OPTION, WITHOUT CHARGE, ANY PART FOUND TO BE DEFECTIVE AND ANY LABOR AND MATERIAL EXPENSE INCURRED BY SELLER IN REPAIRING OR REPLACING SUCH PART. SUCH WARRANTY SHALL BE LIMITED TO THE ORIGINAL PURCHASER ONLY AND SHALL BE EFFECTIVE FOR A PERIOD OF ONE YEAR FROM DATE OF ORIGINAL INSTALLATION OR 18 MONTHS FROM DATE OF PURCHASE, WHICHEVER IS EARLIER, PROVIDED THAT TERMS OF PAYMENT HAVE BEEN FULLY MET.

This warranty is valid only if the equipment is installed, started, and demonstrated under the supervision of a factory-authorized installer.

Abuse, acts of God, belt jams, cleaning, customer abuse, insufficient utilities, lubrication, maintenance, non-oven related issues, preventative maintenance, or normal maintenance function including adjustment of airflow, burners, conveyor components, door mechanisms, microswitches, pilot burners, thermostats, and replacement of bushings, light bulbs, fuses, indicating lights, and wear points, are not covered by this **no quibble warranty**.

Seller shall be responsible only for repairs or replacements of defective parts performed by Seller's authorized service personnel. Authorized service agencies are located in principal cities throughout the contiguous United States, Alaska, and Hawaii. This warranty is valid in the 50 United States and is void elsewhere unless the product is purchased through Middleby International with warranty included.

The foregoing warranty is exclusive and in lieu of all other warranties, expressed or implied. There are no implied warranties of merchantability or of fitness for a particular purpose.

The foregoing shall be the Seller's sole and exclusive obligation and Buyer's sole and exclusive remedy for any action, including breach of contract or negligence. In no event shall Seller be liable for a sum in excess of the purchase price of the item. Seller shall not be liable for any prospective or lost profits of the buyer.

This warranty is effective on Middleby Marshall equipment sold on, or after January 1st, 2007.

© 2019 - Middleby Marshall, A Middleby Company.

MIDDLEBY MARSHALL OVEN LIMITED WARRANTY (Non U.S.A.)

The Seller warrants equipment manufactured by it to be free from defects in material and workmanship for which it is responsible. The Seller's obligation under this warranty shall be limited to replacing or repairing, at Seller's option, without charge, F.O.B. Seller's factory, any part found defective and any labor and material expense incurred by Seller in repairing or replacing such part. Such warranty is limited to a period of one year from the date of original installation or 15 months from date of shipment from Seller's factory, whichever is earlier, provided that terms of payment have been fully met. All labor shall be performed during regular working hours. Overtime premium will be charged to the Buyer.

This warranty is not valid unless equipment is installed, started, and demonstrated under the supervision of a factory-authorized installer.

Normal maintenance functions including lubrication, adjustment of airflow, thermostats, door mechanisms, microswitches, burners and pilot burners, and replacement of light bulbs, fuses, and indicating lights, are not covered by warranty.

Any repair or replacement of defective parts shall be performed by Seller's authorized service personnel. Seller shall not be responsible for any costs incurred if the work is performed by anyone other than the Seller's authorized service personnel.

When returning any part under warranty, the part must be intact and complete, without evidence of misuse or abuse, freight prepaid.

Seller shall not be liable for any consequential damages of any kind which occur during the course of installation of equipment, or which result from the use or misuse by Buyer, its employees or others of the equipment supplied hereunder, at Buyer's sole and exclusive remedy against Seller for any breach of the foregoing warranty or otherwise shall be for the repair or replacement of the equipment or parts thereof affected by such breach.

The foregoing warranty shall be valid and binding upon Seller if and only if Buyer loads, operates, and maintains the equipment supplied hereunder in accordance with the instruction manual provided to Buyer. Seller does not guarantee the process of manufacture by Buyer or quality of product to be produced by the equipment supplied hereunder and Seller shall not be liable for any prospective or lost profits of Buyer.

The foregoing shall be Seller's sole and exclusive obligation and Buyer's sole and exclusive remedy for any action, whether in breach of contract or negligence. In no event shall Seller be liable for a sum in excess of the purchase price of the item.

THE FOREGOING WARRANTY IS EXCLUSIVE AND IN LIEU OF ALL OTHER EXPRESS AND IMPLIED WARRANTIES WHATSOEVER. SPECIFICALLY, THERE ARE NO IMPLIED WARRANTIES OF MERCHANTABILITY OR FITNESS FOR A PARTICULAR PURPOSE.

Table of Contents

SECTION 1 DESCRIPTION 5
- I. MODEL IDENTIFICATION 5
- II. DZ26T/DZ33T/DZ55T SERIES SPECIFICATIONS . 6
- III. COMPONENT FUNCTION 7
  - A. Touch Screen Oven Controller 7
  - B. Infrared Heating Panels 8
  - C. Conveyor 8
  - D. Cooling Fan 8

SECTION 2 INSTALLATION 9
- I. UNLOADING, DIMENSIONS, AND ROUGH-IN 10
  - A. Inspect for Shipping Damage 10
  - B. Placement of Oven 10
  - C. Items for Stacking Oven 10
  - D. Base Section Assembly 22
  - E. Mounting Single Oven onto Base Assembly 22
  - F. Stacking and Mounting Two Ovens 23
  - G. Stacking and Mounting Three Ovens 23
  - H. Loose Parts 23
- II. VENTILATION GUIDELINES 25
- III. ELECTRICAL CONNECTION INFORMATION FOR DZ26T/DZ33T/DZ55T-SERIES OVENS 26

SECTION 3 OPERATION 27
- I. CONTROL FUNCTIONS 27
- II. COMPONENT INFORMATION AND LOCATION . 27
  - A. Touch Screen Oven Controller 27
  - B. Circuit Breakers 27
  - C. Fan Warning Light 27
  - D. On/Off Switch 27
- III. STEP-BY-STEP OPERATION 28
  - A. Daily Startup Procedure 28
  - B. Daily Shutdown Procedure 30
- IV. TOUCH SCREEN ADJUSTMENTS 31
  - A. Setup Mode 31
  - B. Standby Mode 37
  - C. Info Mode 38
- V. QUICK REFERENCE: FAULTS 39
- VI. COOKING IN A CTX OVEN 41
  - A. Cooking Trials 41
  - B. Loading the Conveyor 41

SECTION 4 CLEANING AND MAINTENANCE 45
- I. CLEANING - DAILY 45
  - A. Daily Cleaning Tools 45
  - B. Daily Cleaning Procedures 45
- II. CLEANING - WEEKLY 48
- III. MAINTENANCE - EVERY 6 MONTHS 49
  - A. Electrical Terminals 49
  - B. Ventilation 49
  - C. Vent Check 49
- IV. KEY SPARE PARTS KIT 49

SECTION 5 TROUBLESHOOTING 53

SECTION 6 ELECTRICAL SCHEMATICS 55

SECTION 1
DESCRIPTION

I. MODEL IDENTIFICATION

CTX DZ26T/DZ33T/DZ55T conveyor ovens are designed to cook, bake, or broil in high volume with consistent quality results. The CTX oven may be used either as a single oven or stacked for use as double or triple ovens. DZ33T and DZ55T ovens can stack up to four units high. 15"-leg, 4"-leg, and no-leg configurations are available.

CTX Oven Features

- Electrically powered
- Zone-heated by infrared panels
- Conveyorized
- Touch screen controlled

CTX Oven Sizes

- DZ26T – 26" (660mm) long cooking chamber and touch screen control
- DZ33T – 31" (787mm) long cooking chamber and touch screen control
- DZ55T – 55" (1397mm) long cooking chamber and touch screen control

NOTE: “DZ” designation on ovens stands for: “Dual Zone” Temperature Control.

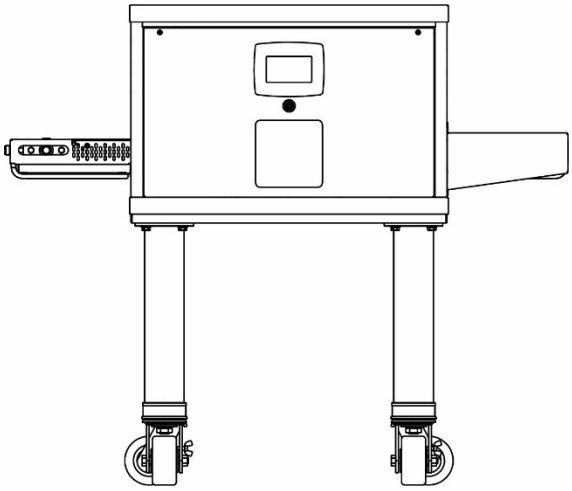

Figure 1. Single Oven

NOTE: DZ26T versions are shown.

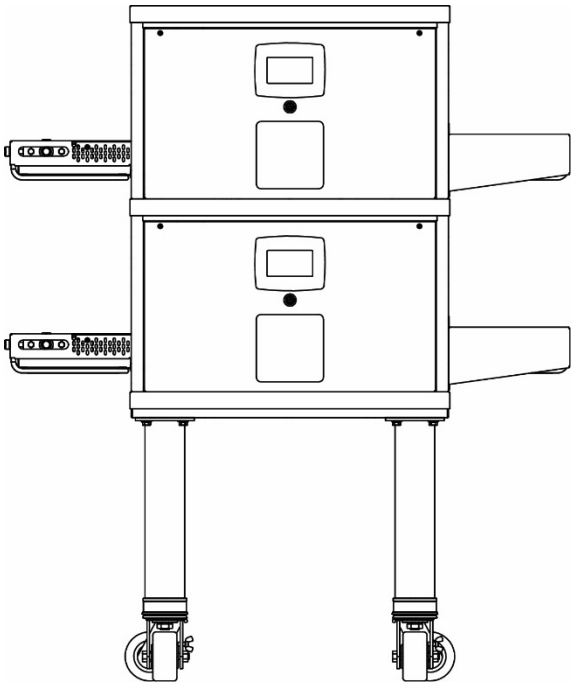

Figure 2. Double-Stacked Oven

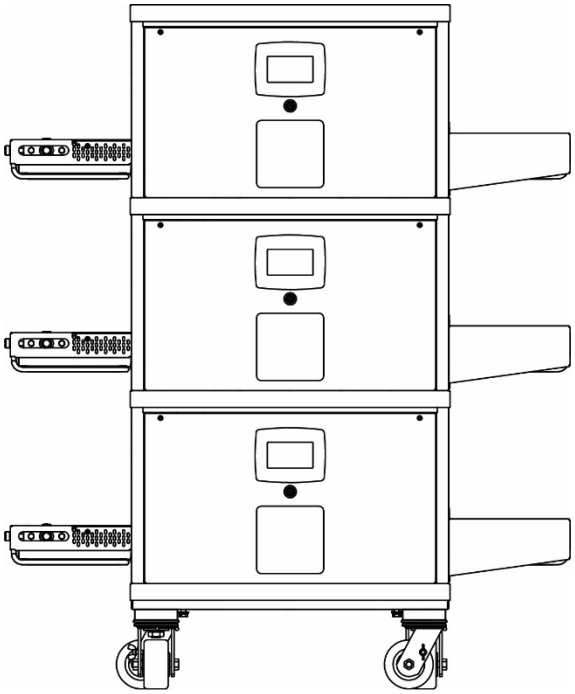

Figure 3. Triple-Stacked Oven

II. DZ26T/DZ33T/DZ55T SERIES SPECIFICATIONS

RECOMMENDED MINIMUM CLEARANCES

Rear of Oven to Wall - 0" (0mm)	Left Side of Oven to Wall - 4" (102mm)	Right Side of Oven to Wall - 4" (102mm)

DZ26T/DZ33T/DZ55T SERIES ELECTRICAL SPECIFICATIONS

Model No.	*AC Volts*	*Phase*	*Hz*	*Connected kW*	*Avg Operating kW*	*Connected Load (Amps)*				*Breakers*
						L1	*L2*	*L3*	*N*	
DZ26T Domestic										
DZ26T	208	1	50/60	8.0	4.3	38.5	38.5	-	-	40 A
DZ26T	208	3	50/60	8.0	4.3	25.4	25.4	16.6	-	30 A*
DZ26T	240	1	50/60	8.0	4.3	33.3	33.3	-	-	35 A
DZ26T	240	3	50/60	8.0	4.3	22.1	22.1	14.4	-	25 A*
DZ26T International										
DZ26T (CE Listed)	230	1	50/60	7.3	4.3	32.0	32.0	-	-	40 A
DZ26T (CE Listed)	380	3	50/60	6.7	4.3	15.3	7.7	7.7	7.7	20 A
DZ33T Domestic										
DZ33T	208	1	50/60	7.7	4.7	32.0	32.0	--	--	35 A
DZ33T	208	3	50/60	7.5	4.7	26.0	26.0	19.0	--	30 A*
DZ33T	240	1	50/60	7.6	5.0	28.0	28.0	--	--	30 A
DZ33T	240	3	50/60	7.9	5.0	23.0	23.0	17.0	--	25 A*
DZ33T International										
DZ33T (CE Listed)	230	3	50/60	6.9	5.0	22.0	22.0	16.0	--	30 A
DZ33T (CE Listed)	380	3	50/60	6.8	5.0	18.0	9.0	9.0	9.0	25 A
DZ33T	416	3	50/60	7.7	5.0	19.0	10.0	10.0	10.0	25 A
DZ55T Domestic										
DZ55T	208	1	50/60	20	17.4	40.4	40.2	--	--	75 A
DZ55T	208	3	50/60	20	17.4	29.4	26.7	19.5	--	50 A*
DZ55T	240	1	50/60	20	18.3	38.4	38.3	--	--	75 A
DZ55T	240	3	50/60	20	18.3	27.5	25.4	17.7	--	50 A*
DZ55T International										
DZ55T (CE Listed)	230	1	50/60	18.4	10.2	38.6	38.5	--	--	75 A
DZ55T (CE Listed)	380	3	50/60	16.8	14.8	20.2	10.6	8.6	10.6	40 A
DZ55T	380	3	50/60	16.8	14.8	20.2	10.6	8.6	10.6	40 A

** A NEMA L15-30R receptacle is also available as an option. Canada & others require a breaker 5 AMPS greater than breaker size shown.*

NOTE: Wiring Diagrams are contained in Section 6 of this Manual and are also located inside the oven at the bottom of the Control Panel. Additional electrical information is provided on the oven's serial plate.

This Manual Must Be Kept For Future Reference.

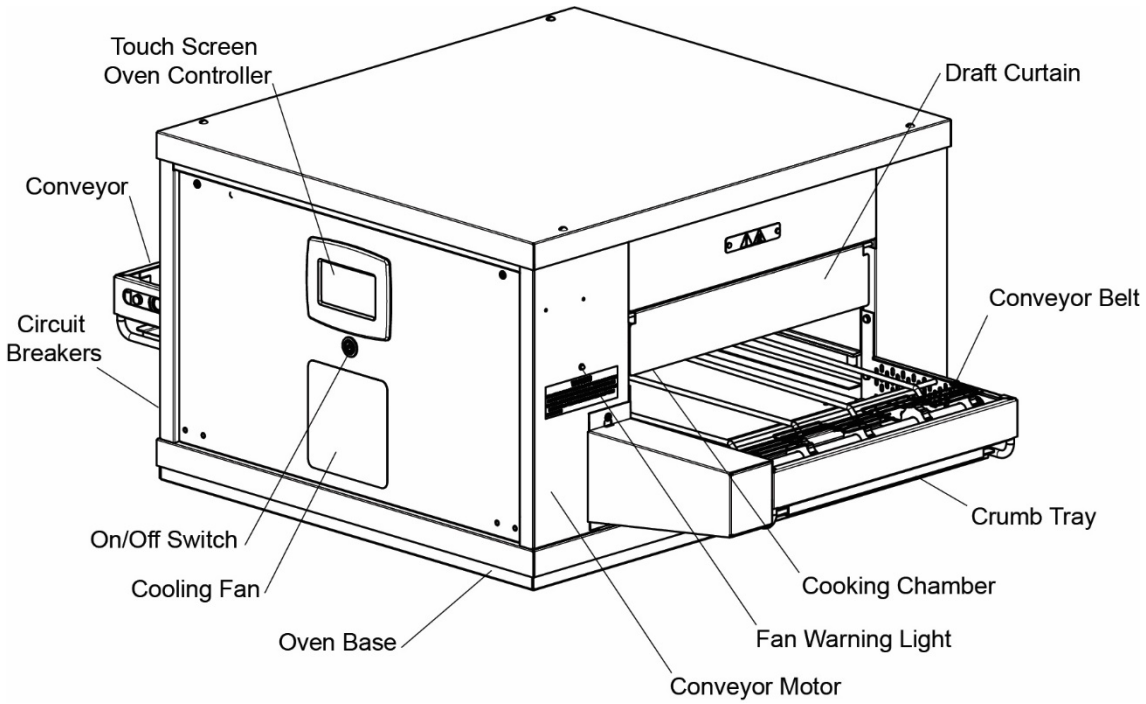

Figure 4. Components Locations

III. COMPONENT FUNCTION

A. Touch Screen Oven Controller

The touch screen controller controls all functions of the oven. The cooking temperatures can be set from 200°F to 900°F (93°C to 509°C). Cooking times (conveyor speed) can be set from 1:00 minute to 60:00 minutes

The controller features several modes including:

- Manual Operation
- Preset Operation
- Standby
- Self-cleaning
- Setup
- Service

In the Preset Operation mode, oven temperatures and cook times can be preset and chosen with one touch. Up to 15 presets can be custom-named.

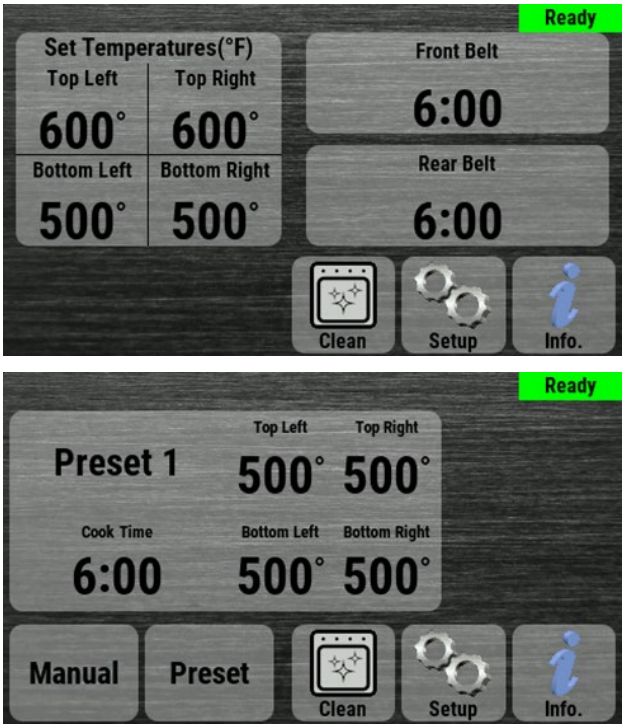

Figure 5. Touch Screen Oven Controller in Manual and Preset Modes

Figure 6. CTX Heat Zones

B. Infrared Heating Panels

Heating panels are positioned above and below the conveyor belt in the oven chamber (Figure 4). When energized these panels emit infrared long waves. These waves do not heat the air through which they pass. Instead, the waves are absorbed by the outer surface of the product transported through the oven on the conveyor belt. Using this application, food is placed on the conveyor and the unique properties of the infrared waves cause the food to cook from the outside to the center in traditional fashion.

C. Conveyor

The conveyor is used to convey the product through the oven deck (chamber). The conveyor is made up of 1 to 2 stainless steel wire belts which can travel in either direction around the frame. The conveyor is controlled by the controller and can travel at speeds from 1:00 to 60:00 minutes. The speed of the conveyor determines how long the product will be in the cooking chamber which is the cooking time.

D. Cooling Fan

Air is drawn through the filter by a 24 volt DC cooling fan located immediately behind. The fan circulates air throughout the entire electrical raceway to cool the front panel, top panel, and the electrical components.

NOTICE

All DZ ovens are Voltage Specific. Check the oven data plate for the voltage. Applying the wrong voltage can immediately damage the oven. Refer to Section 2 Installation for complete instructions before installing an oven.

SECTION 2
INSTALLATION

WARNING

Keep the appliance area free and clear of combustibles.

WARNING

The oven must be installed on an even (level) non-flammable flooring and any adjacent walls must not be flammable. Recommended minimum clearances are specified in the Description section of this manual.

WARNING

Do not obstruct the flow of ventilation air to and from your oven. There must be no obstruction around or underneath the oven. Constructional changes to the area where the oven is installed shall not affect the air supply to the oven.

CAUTION

To reduce the risk of fire, the appliance is to be mounted on floors of noncombustible construction with noncombustible flooring and surface finish and with no combustible material against the underside thereof, or on noncombustible slabs or arches having no combustible material against the underside thereof. Such construction shall in all cases extend not less than 12 inches (304mm) beyond the equipment on all sides.

NOTICE

For additional installation information, contact your local Authorized Service Agent.

NOTICE

There must be adequate clearance between the oven and combustible construction. Clearance must also be provided for servicing and for proper operation.

IMPORTANT

An electrical wiring diagram for the oven is located inside the control compartment.

NOTE: All aspects of the oven installation, including placement, utility connections, and ventilation requirements, must conform with any applicable local, national, or international codes. These codes supersede the requirements and guidelines provided in this manual.

NOTE: In the USA, the oven installation must conform to local codes. Electric ovens, when installed, must be electrically grounded in accordance with local codes, or in the absence of local codes, with the National Electrical Code (NEC), or ANSI/NFPA 70.

NOTE: In Canada, the oven installation must conform with local codes. Electric ovens, when installed, must be electrically grounded in accordance with local codes, or in the absence of local codes, with Canadian Electrical Code, CSA C22.2.

CAUTION

It is recommended that the oven be placed under a ventilation hood for adequate air supply and ventilation.

I. UNLOADING, DIMENSIONS, AND ROUGH-IN

Your Middleby Marshall DZ26T/DZ33T/DZ55T-Series Oven is shipped partially assembled. It will arrive in a carton on a crate.

A. Inspect for Shipping Damage

All shipping containers should be examined for damage before and during unloading. This equipment was carefully inspected and packaged at the factory. The freight carrier has assumed responsibility for its safe transit and delivery. If equipment is received in damaged condition, either apparent or concealed, a claim must be made with the delivering carrier.

- Apparent Damage or Loss: If damage or loss is apparent, it must be noted on the freight bill or express receipt at the time of delivery, and it must be signed by the carrier's agent (driver). If this is not done, the carrier may refuse the claim. The carrier will supply the necessary claim forms.
- Concealed Damage or Loss: If damage or loss is not apparent until after equipment is uncrated, a request for inspection of concealed damage must be made with carrier within 10 days. The carrier will make an inspection and will supply necessary claim forms. Be certain to retain all contents plus external and internal packaging/crating materials for inspection.

B. Placement of Oven

Some very important considerations must be made when choosing the place where the oven is to operate. See Figure 7 to Figure 9Figure 17 for dimensions.

- This oven is conveyorized and operates continuously. It should be placed so it fits into the "flow" of the operation.
- Drafts entering the oven chambers can cause inconsistent cooking results. Check the area surrounding the oven and eliminate sources of drafts such as open windows or doors and fans or other appliances that cause air circulation.
- Oven should be positioned so hot air from another piece of equipment cannot enter the oven cooling fan air intake on the oven front. Serious problems could occur.

NOTICE

To validate a new oven(s) warranty a certified CTX installer must supervise the installation.

C. Items for Stacking Oven

The following items are required for stacking ovens:

Quantity	Description
2	10' (305cm) 4-by-4 boards
2	4' (122cm) 4-by-4 boards (stacking ovens only)
2	1-1/2"x7' (213cm) rigid pipe Schedule 40
2	Custom M5 Lift (Vermette)

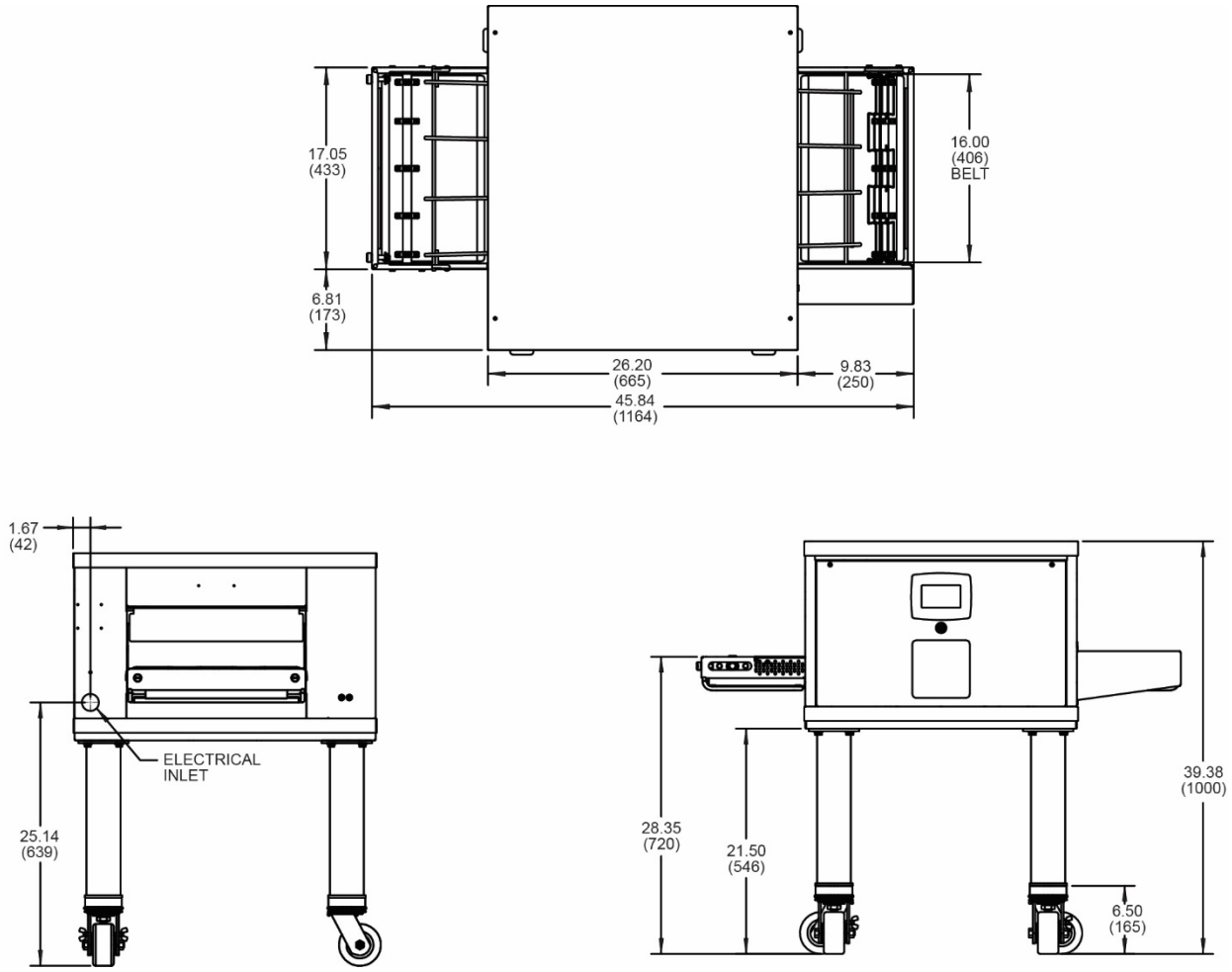

Figure 7. DZ26T Single Oven on a Base

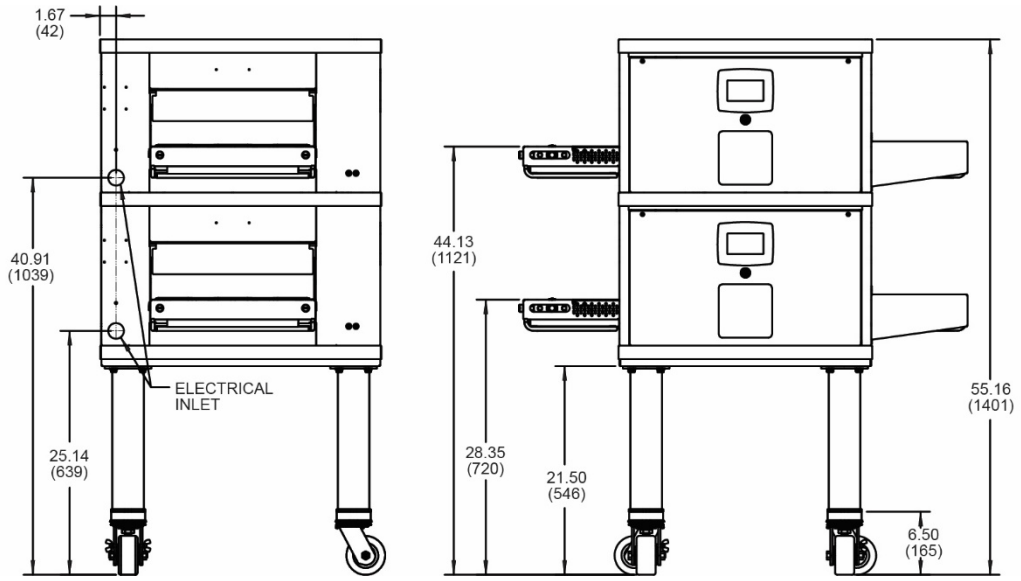

Figure 8. DZ26T Double-Stacked Oven on a Base

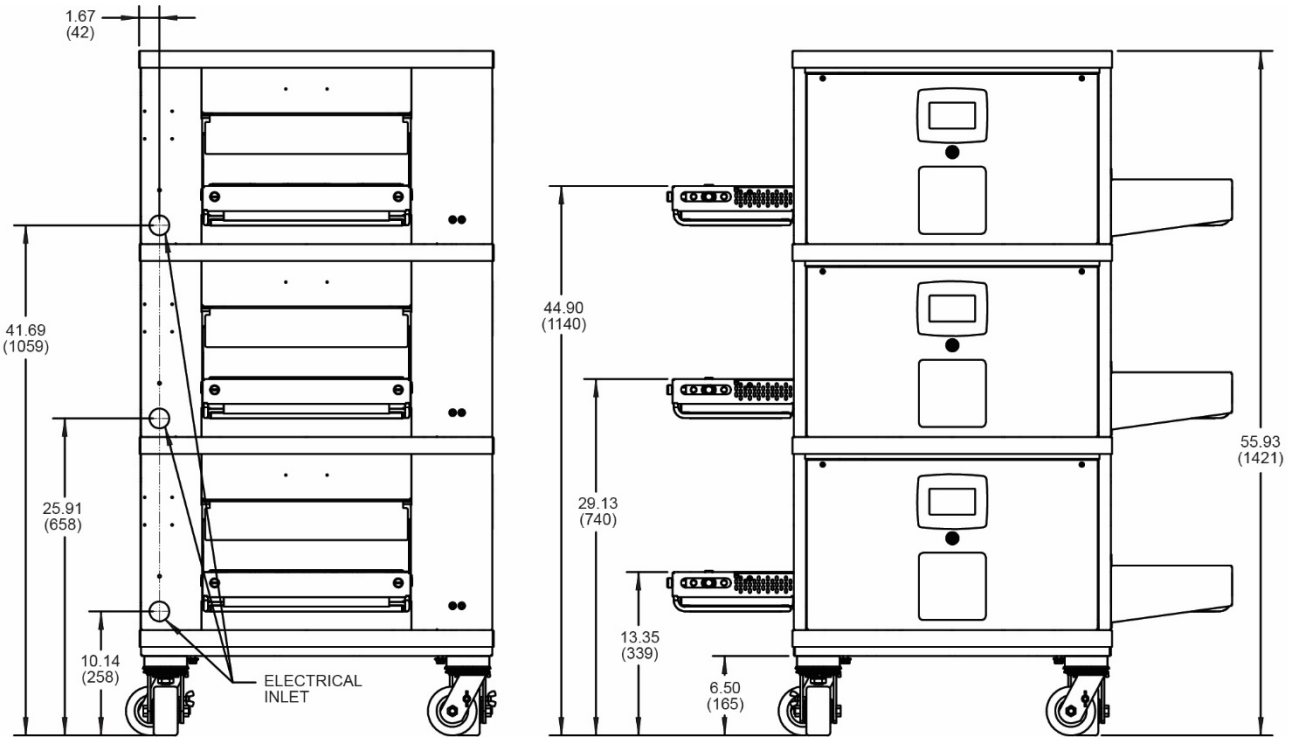

Figure 9. DZ26T Triple-Stacked Oven on a Base

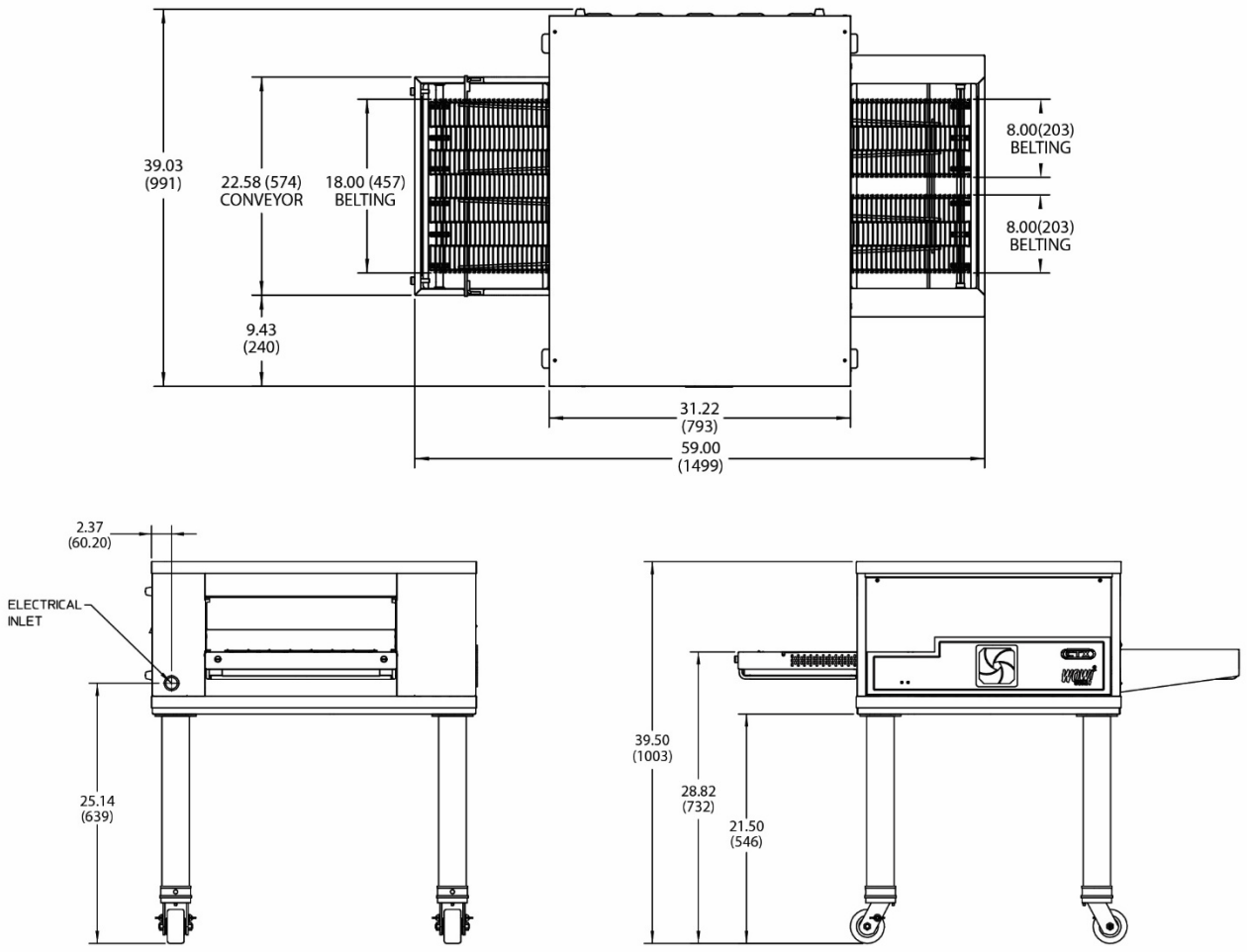

Figure 10. DZ33T Single Oven on a Base

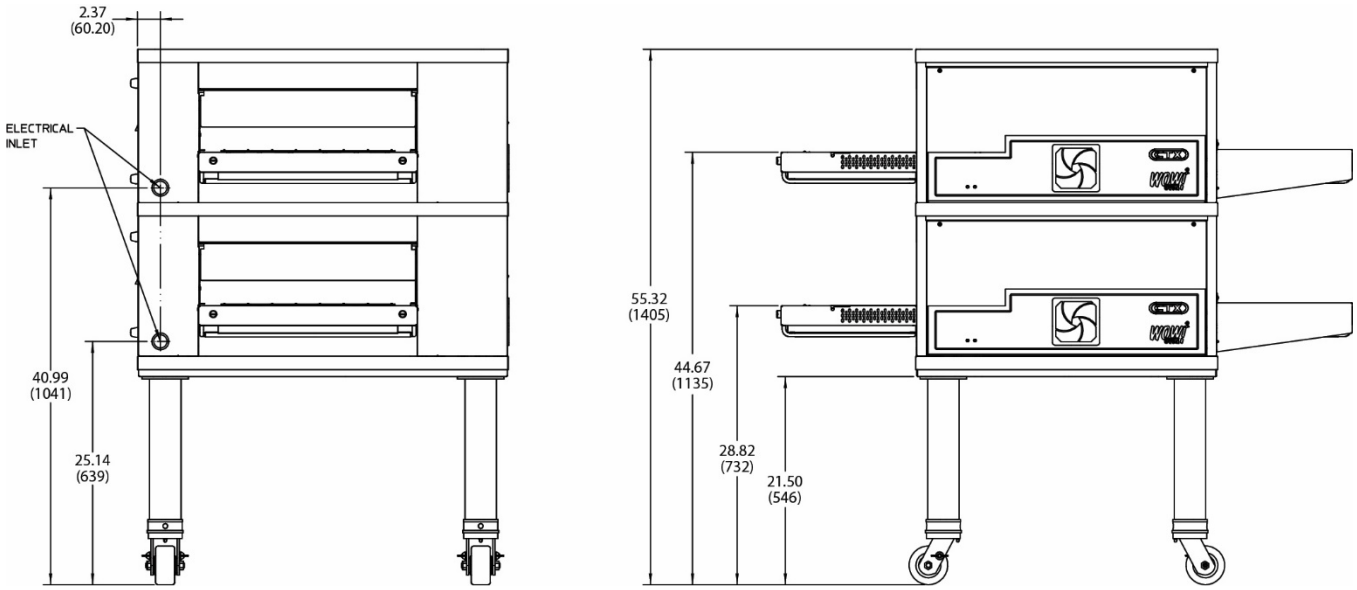

Figure 11. DZ33T Double-Stacked Oven on a Base

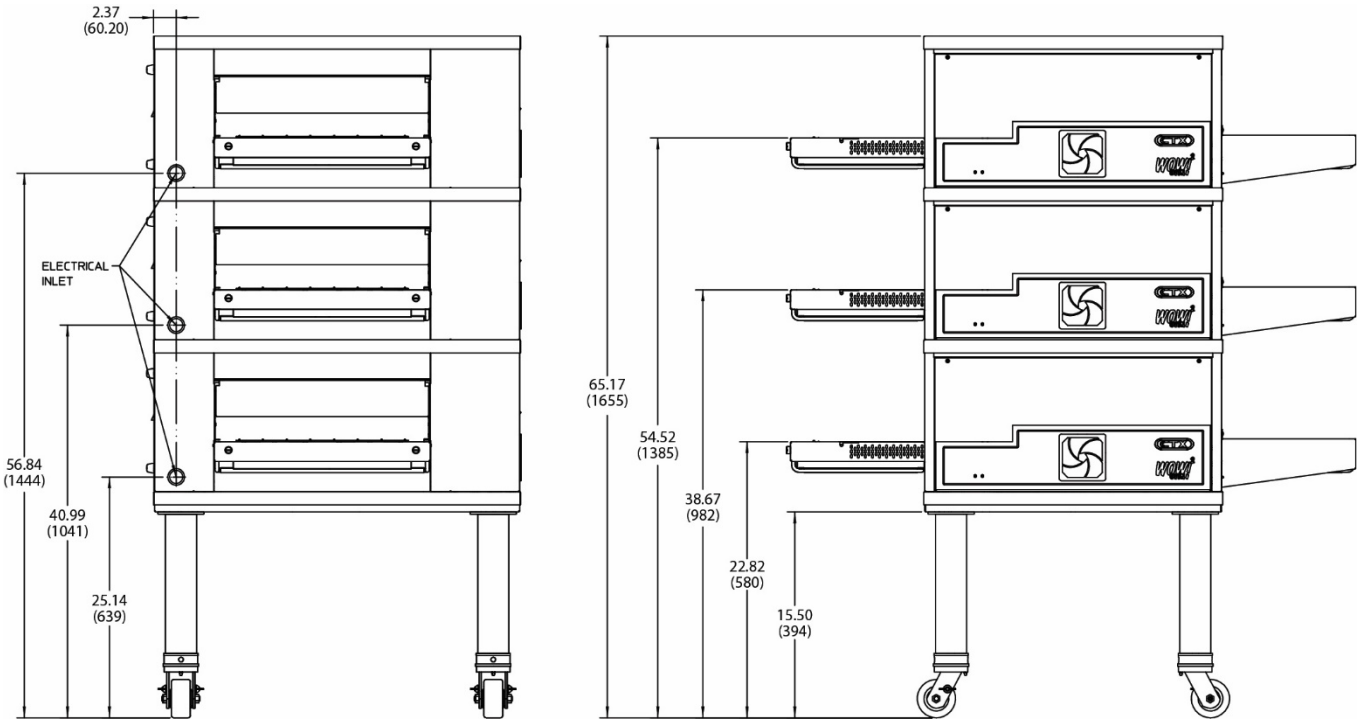

Figure 12. DZ33T Triple-Stacked Oven on a Base

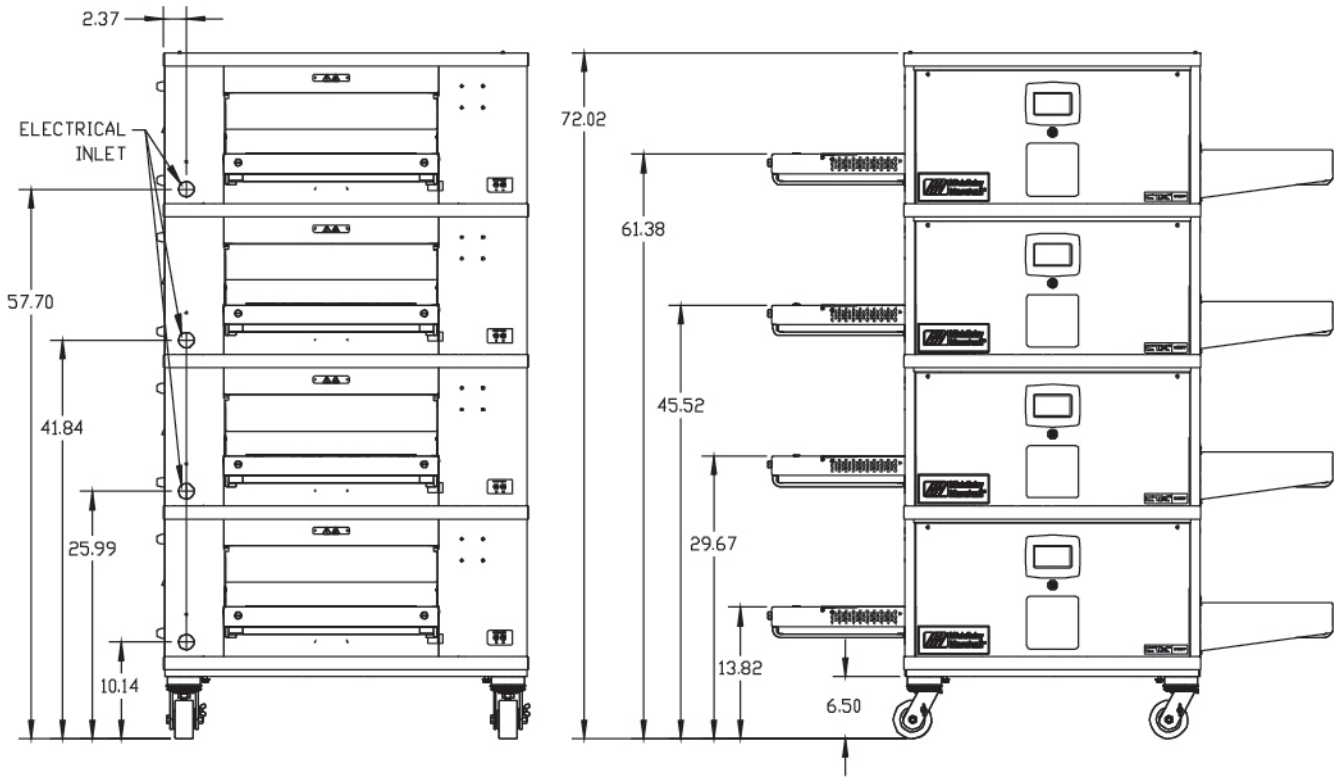

Figure 13. DZ33T Quad-Stacked Oven

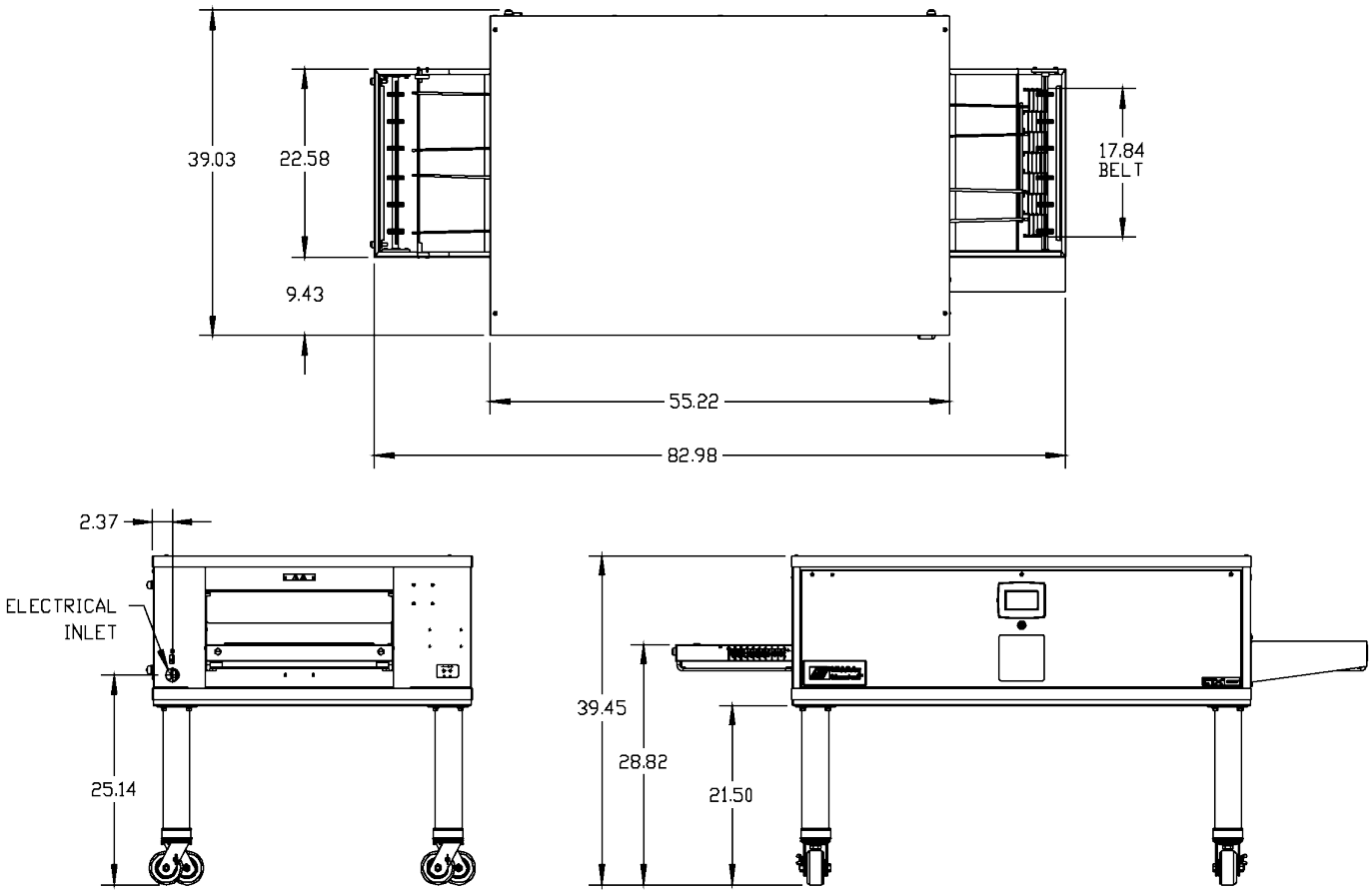

Figure 14. DZ55T Single Oven on a Base

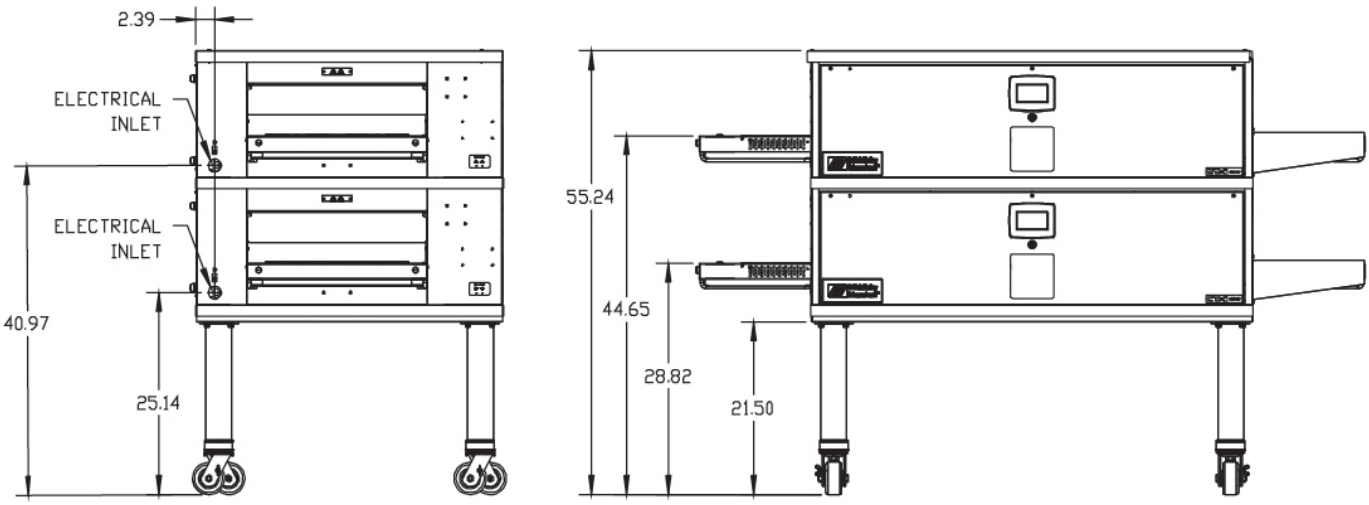

Figure 15. DZ55T Double-Stacked Oven on a Base

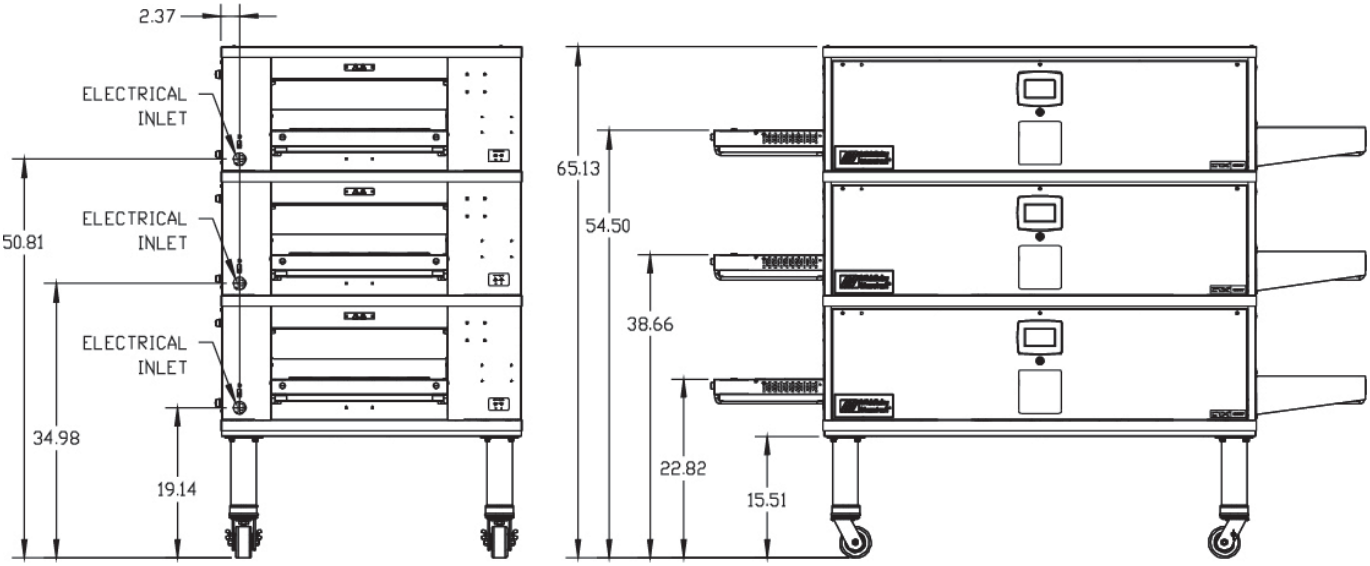

Figure 16. DZ55T Triple-Stacked Oven on a Base

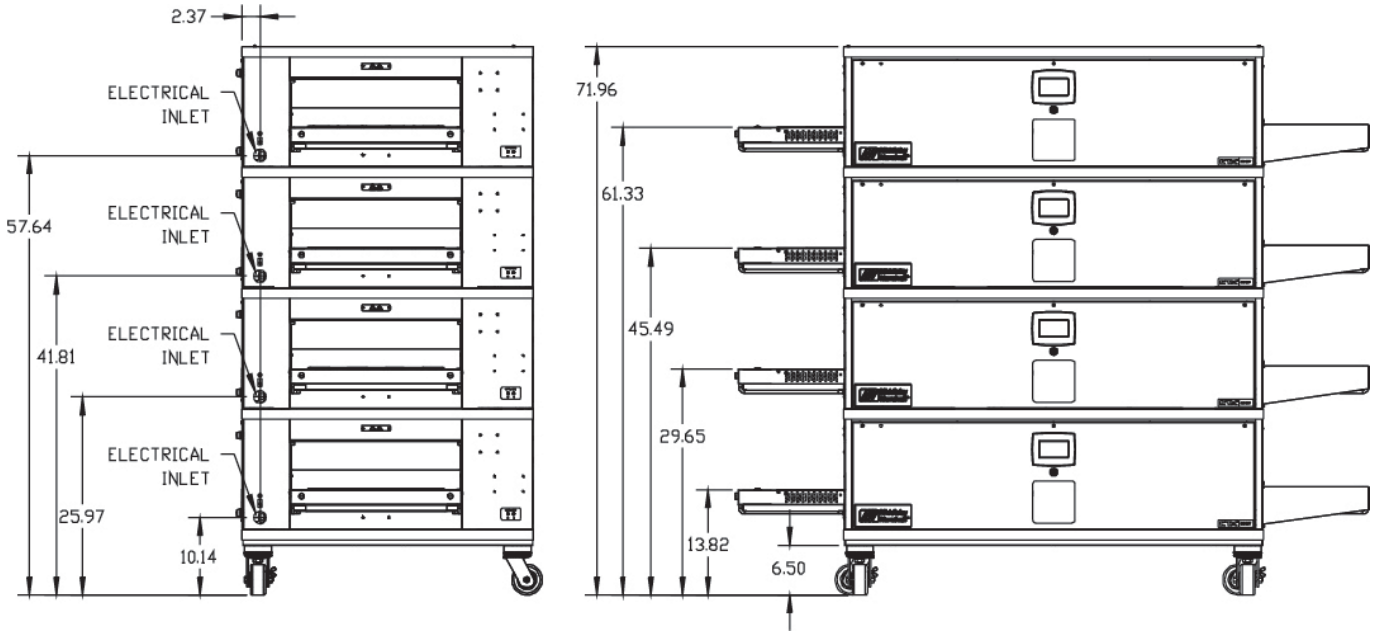

Figure 17. DZ55T Quad-Stacked Oven

DZ26T Single Oven Stand Parts

Item	Qty.	Part Number	Description
1	1	75219	INSUL, BASE PART A
2	2	75220	INSUL, BASE PART C
3	2	75221	INSUL, BASE PART B
PARTS LISTED ABOVE ARE FROM 75218 KIT, DZ26T INSULATION			
4	1	75213	WLDMT. BASE DZ33
5	1	73403	PANEL, TOP
6	4	66948	ASSY. LEG, CASTER
7	4	59156	SCR, SL TRUSS HD SS 10-32X1-1/2"
8	16	21422-0001	WASHER, LOCK SPLIT 3/8" ZP
9	16	21416-0001	WASHER, FLAT SS 3/8"
10	16	2000531	SCR, CAP HX HD 3/8"-16X1" NP

DZ26T Double Oven Stand Parts

Item	Qty.	Part Number	Description
1	1	75219	INSUL, BASE PART A
2	2	75220	INSUL, BASE PART C
3	2	75221	INSUL, BASE PART B
PARTS LISTED ABOVE ARE FROM 75218 KIT, DZ26T INSULATION			
4	1	75213	WLDMT. BASE DZ33
5	1	73403	PANEL, TOP
6	4	66948	ASSY. LEG, CASTER
7	4	59156	SCR, SL TRUSS HD SS 10-32X1-1/2"
8	16	21422-0001	WASHER, LOCK SPLIT 3/8" ZP
9	16	21416-0001	WASHER, FLAT SS 3/8"
10	16	2000531	SCR, CAP HX HD 3/8"-16X1" NP

DZ26T Triple Oven Stand Parts

Item	Qty.	Part Number	Description
1	1	75219	INSUL, BASE PART A
2	2	75220	INSUL, BASE PART C
3	2	75221	INSUL, BASE PART B
PARTS LISTED ABOVE ARE FROM 75218 KIT, DZ26T INSULATION			
4	1	75213	WLDMT. BASE DZ33
5	1	73403	PANEL, TOP
6	4	74319	CASTER
7	4	59156	SCR, SL TRUSS HD SS 10-32X1-1/2"

DZ33T Single Oven Stand Parts

Item	Qty.	Part Number	Description
1	1	67880	INSUL, BASE PART A
2	2	67881	INSUL, BASE PART C
3	2	67882	INSUL, BASE PART B
PARTS LISTED ABOVE ARE FROM 69978 KIT, DZ33T INSULATION			
4	1	67884	WLDMT. BASE DZ33
5	1	67614	PANEL, TOP
6	4	66948	ASSY. LEG, CASTER
7	4	59156	SCR, SL TRUSS HD SS 10-32X1-1/2"
8	16	21422-0001	WASHER, LOCK SPLIT 3/8" ZP
9	16	21416-0001	WASHER, FLAT SS 3/8"
10	16	2000531	SCR, CAP HX HD 3/8"-16X1" NP

DZ33T Double Oven Stand Parts

Item	Qty.	Part Number	Description
1	1	67880	INSUL, BASE PART A
2	2	67881	INSUL, BASE PART C
3	2	67882	INSUL, BASE PART B
PARTS LISTED ABOVE ARE FROM 69978 KIT, DZ33T INSULATION			
4	1	67884	WLDMT. BASE DZ33
5	1	67614	PANEL, TOP
6	4	66948	ASSY. LEG, CASTER
7	4	59156	SCR, SL TRUSS HD SS 10-32X1-1/2"
8	16	21422-0001	WASHER, LOCK SPLIT 3/8" ZP
9	16	21416-0001	WASHER, FLAT SS 3/8"
10	16	2000531	SCR, CAP HX HD 3/8"-16X1" NP

DZ33T Triple Oven Stand Parts

Item	Qty.	Part Number	Description
1	1	67880	INSUL, BASE PART A
2	2	67881	INSUL, BASE PART C
3	2	67882	INSUL, BASE PART B
PARTS LISTED ABOVE ARE FROM 69978 KIT, DZ33T INSULATION			
4	1	67884	WLDMT. BASE DZ33
5	1	67614	PANEL, TOP
6	4	66947	ASSY. LEG, CASTER
7	4	59156	SCR, SL TRUSS HD SS 10-32X1-1/2"
8	16	21422-0001	WASHER, LOCK SPLIT 3/8" ZP
9	16	21416-0001	WASHER, FLAT SS 3/8"
10	16	2000531	SCR, CAP HX HD 3/8"-16X1" NP

DZ33T Quad Oven Stand Parts

Item	Qty.	Part Number	Description
1	1	67880	INSUL, BASE PART A
2	2	67881	INSUL, BASE PART C
3	2	67882	INSUL, BASE PART B
PARTS LISTED ABOVE ARE FROM 69978 KIT, DZ33T INSULATION			
4	1	67884	WLDMT. BASE DZ33
5	1	67614	PANEL, TOP
6	4	74319	CASTER, STUD W/BRAKE 4" WHEEL
7	4	59156	SCR, SL TRUSS HD SS 10-32X1-1/2"

DZ55T Single Oven Stand Parts

Item	Qty.	Part Number	Description
1	1	68316	INSUL, BASE PART A
2	2	67881	INSUL, BASE PART C
3	2	68317	INSUL, BASE PART B
PARTS LISTED ABOVE ARE FROM 71770 KIT, DZ55T INSULATION			
4	1	68314	WLDMT. BASE DZ55
5	1	68263	PANEL, TOP
6	4	66948	LEG, 15" COMMON TUBE AND CASTER
7	4	59156	SCR, SL TRUSS HD SS 10-32X1-1/2"
8	16	21422-0001	WASHER, LOCK SPLIT 3/8" ZP
9	16	21416-0001	WASHER, FLAT SS 3/8"
10	16	2000531	SCR, CAP HX HD 3/8"-16X1" NP

DZ55T Double Oven Stand Parts

Item	Qty.	Part Number	Description
1	1	68316	INSUL, BASE PART A
2	2	67881	INSUL, BASE PART C
3	2	68317	INSUL, BASE PART B
PARTS LISTED ABOVE ARE FROM 71770 KIT, DZ55T INSULATION			
4	1	68314	WLDMT. BASE DZ55
5	1	68263	PANEL, TOP
6	4	66948	LEG, 15" COMMON TUBE AND CASTER
7	4	59156	SCR, SL TRUSS HD SS 10-32X1-1/2"
8	16	21422-0001	WASHER, LOCK SPLIT 3/8" ZP
9	16	21416-0001	WASHER, FLAT SS 3/8"
10	16	2000531	SCR, CAP HX HD 3/8"-16X1" NP

DZ55T Triple Oven Stand Parts

Item	Qty.	Part Number	Description
1	1	68316	INSUL, BASE PART A
2	2	67881	INSUL, BASE PART C
3	2	68317	INSUL, BASE PART B
PARTS LISTED ABOVE ARE FROM 71770 KIT, DZ55T INSULATION			
4	1	68314	WLDMT. BASE DZ55
5	1	68263	PANEL, TOP
6	4	66947	LEG, 9" COMMON TUBE
7	4	59156	SCR, SL TRUSS HD SS 10-32X1-1/2"
8	16	21422-0001	WASHER, LOCK SPLIT 3/8" ZP
9	16	21416-0001	WASHER, FLAT SS 3/8"
10	16	2000531	SCR, CAP HX HD 3/8"-16X1" NP

DZ55T Quad Oven Stand Parts

Item	Qty.	Part Number	Description
1	1	68316	INSUL, BASE PART A
2	2	67881	INSUL, BASE PART C
3	2	68317	INSUL, BASE PART B
PARTS LISTED ABOVE ARE FROM 71770 KIT, DZ55T INSULATION			
4	1	68314	WLDMT. BASE DZ55
5	1	68263	PANEL, TOP
6	4	74319	CASTER, STUD W/BRAKE 4" WHEEL
7	4	59156	SCR, SL TRUSS HD SS 10-32X1-1/2"

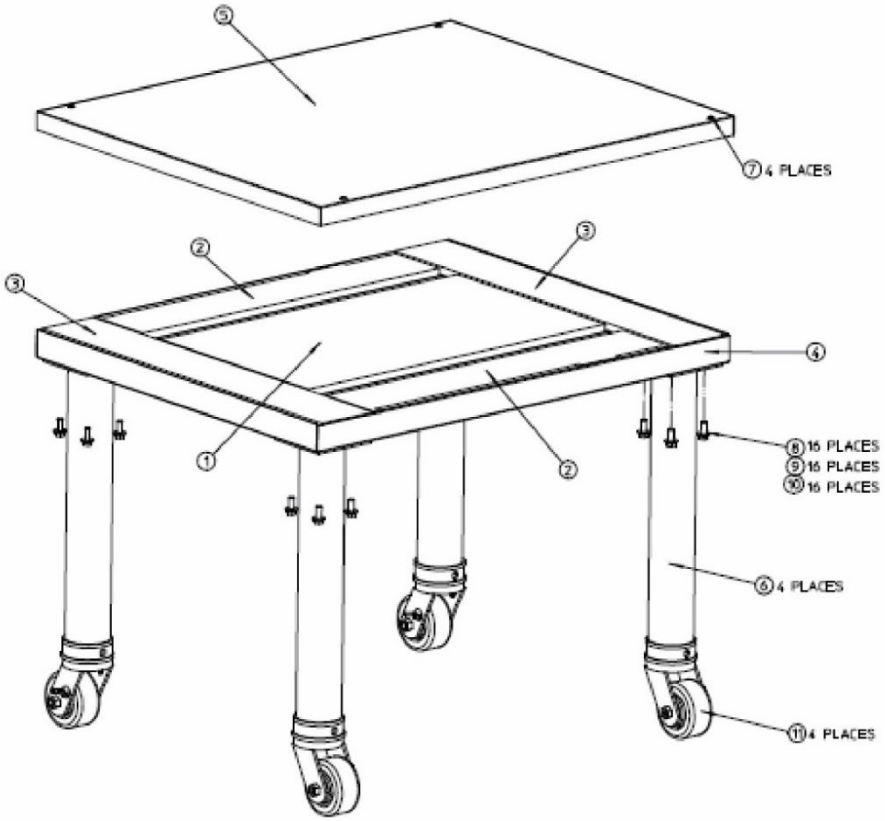

Figure 18. Oven Stand Parts

D. Base Section Assembly

1. Locate the carton containing the oven base. Remove and inventory the contents. Refer to the correct parts lists on pages 19 to 21 and also to Figure 18.
2. Lay Wldmt. Base (Item 4, Figure 18) upside down on the floor and remove the protective film from base. Attach the four Assy. Leg, Caster (Item 5) using 16 SCR, Cap HX HD 3/8"-16X1" NP (Item 10), 16 Washer, Flat SS 3/8" (Item 9), and 16 Washer, Lock Split 3/8" ZP (Item 8).
3. Turn the base assembly upright and install installation, then set aside. Also set aside 4 SCR, SL Truss HD SS 10-32X1-1/2" (Item 7), and Panel, Top (Item 5). The base will be used to stack oven on, and the top secures to the top of the top oven.

E. Mounting Single Oven onto Base Assembly

1. Cut the bands holding the protective shipping carton to the skid. Carefully remove the bands and lift the carton up off the oven.
2. Cut the bands holding the oven to the skid.
3. Slide the two 10' (305cm) long 4-by-4 boards through the oven cavity. The boards should be sticking out of the oven equally on both sides. One of the boards should be placed to the rear of the oven and the other in the front of the oven. See Figure 19.
4. Position the two Vermette lifts on opposite ends of the oven under the 10' (305cm) boards, making sure the legs with wheels are up as close as possible to the skid. Place the two 4' (122cm) long 4-by-4 boards across the two Vermette forks, at least 6" (15cm) in from the end of the forks, and centered with the 10' (305cm) boards running through the oven cavity. See Figure 19.

NOTICE

Lift the oven with the 10' (305cm) 4-by-4 boards running through the oven **only**. **DO NOT** lift the oven by the conveyor. **Damage WILL result.**

5. With the 4' (122cm) boards positioned under the 10' (305cm) boards, begin to lift the oven with the two Vermette lifts. Keep the oven level at all times.
6. When the oven is completely free from the skid, slide the skid out from under the oven.

NOTICE

Dispose of the skid in accordance with local regulations.

7. Lift the oven high enough to position the stand under it. Roll the stand under the oven (**do not** roll the oven and lifts over the stand) and lower onto the stand. The bottom of the oven will wrap around the stand.

CAUTION

Be careful not to place hands or fingers between the oven and stand.

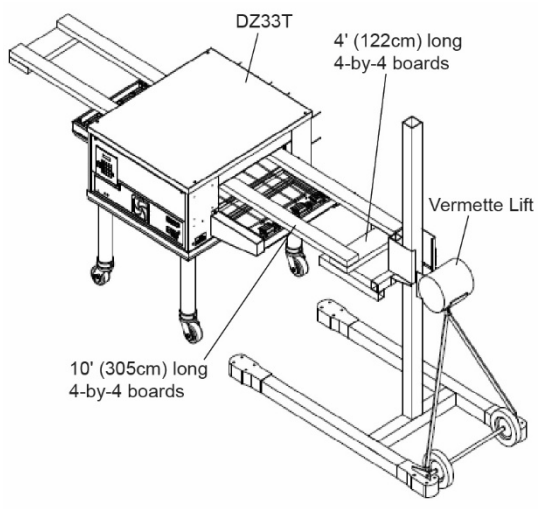

Figure 19.

F. Stacking and Mounting Two Ovens

1. Cut the bands holding the protective shipping carton to the skid. Carefully remove the bands and lift the carton up off the oven.
2. Cut the bands holding the oven to the skid.
3. Slide the two 10' (305cm) long 4-by-4 boards through the oven cavity. The boards should be sticking out of the oven equally on both sides. One of the boards should be placed to the rear of the oven and the other in the front of the oven. See Figure 19.
4. Position the two Vermette lifts on opposite ends of the oven under the 10' (305cm) boards, making sure the legs with wheels are up as close as possible to the skid. Place the two 4' (122cm) long 4-by-4 boards across the two Vermette lift forks, at least 6" (15cm) in from the end of the forks, and centered with the 10' (305cm) boards running through the oven cavity. See Figure 19.

NOTICE

Lift the oven with the 10' (305cm) 4-by-4 boards running through the oven **only**. **DO NOT** lift the oven by the conveyor. **Damage WILL result.**

5. With the 4' (122cm) boards positioned under the 10' (305cm) boards, begin to lift the oven with the two Vermette lifts. Keep the oven level at all times.
6. When the oven is completely free from the skid, slide the skid out from under the oven.

NOTICE

Dispose of the skid in accordance with local regulations.

7. Elevate the upper oven high enough to position the lower oven underneath.
8. Roll the stand with the lower oven under the upper oven (**do not** roll the oven and lifts over the lower oven) and lower onto the lower oven. The bottom of the oven will wrap around the top of the lower oven.

CAUTION

Be careful not to place hands or fingers between the ovens.

G. Stacking and Mounting Three Ovens

1. Follow the previous procedures in step F.

CAUTION

Be careful not to place hands or fingers between the ovens.

NOTICE

Lift the oven with the 10' (305cm) 4-by-4 boards running through the oven cavity **only**. **DO NOT** lift the oven by the conveyor. **Damage WILL result.**

H. Loose Parts

The aluminum crumb trays (1 per oven) are shipped mounted in place. They are removable for cleaning and are considered loose parts. They should be checked prior to start-up to be sure they are properly in place. The stainless-steel draft curtain and exit shelves are packed in a separate carton inside oven.

NOTICE

Make sure protective plastic film is removed from draft curtains before installation.

1. Draft Curtains, stainless steel (2 per oven). These mount above the conveyor at the ends of the cooking chamber. They serve to reduce drafts through the oven chamber and to reduce heat loss to the environment. To install, locate the thin rod above each entrance/exit of the oven. Hang one draft curtain over each rod. They are in their lowest position when hanging vertical. To raise the curtains to their highest position, swing them outward until they are horizontal and then push in toward oven chamber.

NOTICE

Make sure protective plastic film is removed from exit shelves before installation.

2. Exit Shelves, stainless steel (2 per oven). These shelves mount in cantilever fashion at the exit and entrance end of the conveyor and provide a landing zone for cooked product. Depending on the operation, they may or may not be needed or used. To install, place the slotted end of the shelf over the crossbar at the end of the conveyor extension frame.

UTILITY ROUGH-IN DIMENSIONS AND POSITIONING FOR DZ26T/DZ33T/DZ55T-SERIES OVEN

WARNING

Do not use conduit for ground connection.

CAUTION

It is recommended that the oven be placed under a ventilation hood for adequate air supply and ventilation.

IMPORTANT

Electric supply to be provided by customer.

CIRCUIT BREAKER

Separate circuit breaker with lockout/tagout electrical shutoff for each oven. Wire each oven separately.

Consult national or local electrical codes for wire gauge and circuit breaker ratings. CTX by MM recommends circuit breakers as shown in DZ26T/DZ33T/DZ55T Series Specifications in Section 1.

ELECTRICAL SPECIFICATIONS

NOTICE

All DZ ovens are voltage specific. Check the oven data plate for the voltage. Applying the wrong voltage can immediately damage the oven.

SUPPLY WIRE

Supply wire size must be in accordance with the National Electrical Code (current edition) and must be in compliance with local codes. If local codes allow, we recommend that flexible conduit be used for final connection when the oven assembly is on casters and the use of flexible conduit will allow movement for cleaning.

SUGGESTED

If space permits, service should be located near the control console end of the oven(s) to allow convenient access to safety switches.

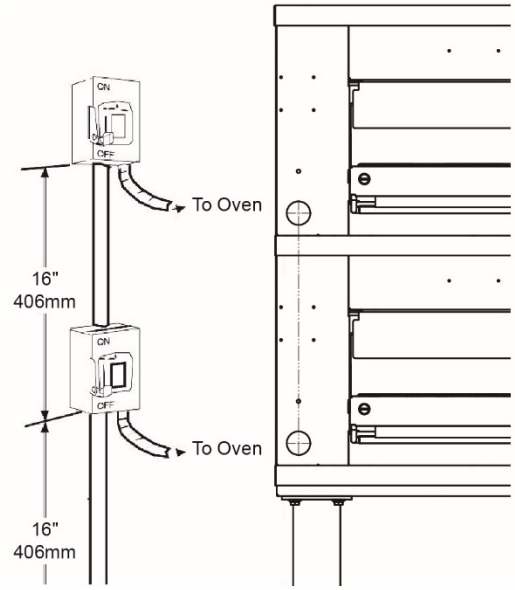

Figure 20. Typical DZ26T/DZ33T/DZ55T Stacked Oven Installation

NOTICE

Where national or local codes require the installation of fire suppression equipment or other supplementary equipment, DO NOT mount the equipment directly to the oven.

Mounting such equipment may:

- Void agency certifications
- Restrict service access
- Lead to increased service expenses for the owner

II. VENTILATION GUIDELINES

A mechanically driven ventilation system is recommended for the DZ26T/DZ33T/DZ55T CTX by MM conveyorized electric ovens.

Local codes and conditions vary greatly from one area to another and must be complied with. You may have a special condition or problem that will require the services of a ventilation engineer or specialist. Proper ventilation is the oven owner's responsibility. Improper ventilation can inhibit oven performance.

III. ELECTRICAL CONNECTION INFORMATION FOR DZ26T/DZ33T/DZ55T-SERIES OVENS

WARNING

Authorized supplier personnel normally accomplish the connections for the ventilation system and electric supply, as arranged by the customer. Following these connections, the factory-authorized installer can perform the initial start-up of the oven.

Check the oven data plate (Figure 21) before making any electric supply connections. Electric supply connections must agree with data on the oven data plate.

NOTE: The electric supply installation must satisfy the requirements of the appropriate statutory authority, such as the National Electrical Code (NEC), ANSI/NFPA70, (U.S.A.); the Canadian Electrical Code, CSA C22.2; the Australian Code AS/NZ5601; or other applicable regulations.

A fused disconnect switch or a main circuit breaker (customer furnished) MUST be installed in the electric supply line for each oven; it is recommended that this switch/circuit breaker have lockout/tagout capability. The electric supply connection must meet all national and local electrical code requirements. Copper is the recommended material for the electrical supply conductors.

This symbol is used to mark a terminal for the connection of a potential equalization conductor.

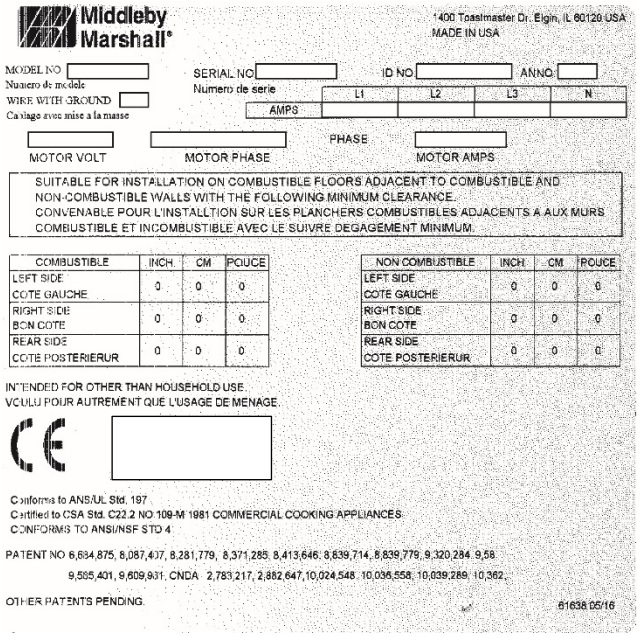
Middleby Marshall®
1400 Toastmaster Dr. Elgin, IL 60120 USA
MADE IN USA
MODEL NO
Numero de modele
WIRE WITH GROUND
Cablage avec mise a la masse
SERIAL NO
Numero de serie
ID NO
ANNO
L1 L2 L3 N
AMPS
MOTOR VOLT
MOTOR PHASE
PHASE
MOTOR AMPS
SUITABLE FOR INSTALLATION ON COMBUSTIBLE FLOORS ADJACENT TO COMBUSTIBLE AND NON-COMBUSTIBLE WALLS WITH THE FOLLOWING MINIMUM CLEARANCE.
CONVENABLE POUR L'INSTALLTION SUR LES PLANCHERS COMBUSTIBLES ADJACENTS A AUX MURS COMBUSTIBLE ET INCOMBUSTIBLE AVEC LE SUIVRE DEGAGEMENT MINIMUM.

COMBUSTIBLE	INCH	CM	POUCE
LEFT SIDE COTE GAUCHE	0	0	0
RIGHT SIDE BON COTE	0	0	0
REAR SIDE COTE POSTERIERUR	0	0	0

NON COMBUSTIBLE	INCH	CM	POUCE
LEFT SIDE COTE GAUCHE	0	0	0
RIGHT SIDE BON COTE	0	0	0
REAR SIDE COTE POSTERIERUR	0	0	0

INTENDED FOR OTHER THAN HOUSEHOLD USE.
VOULU POUR AUTREMENT QUE L'USAGE DE MENAGE.
CE
Conforms to ANSI/UL Std. 197
Certified to CSA Std. C22.2 NO 109-M 1981 COMMERCIAL COOKING APPLIANCES.
CONFORMS TO ANSI/NSF STD 4
PATENT NO 6,684,875, 8,087,407, 8,281,779, 8,371,285, 8,413,646, 8,839,714, 8,839,779, 9,320,284, 9,58
9,595,401, 9,609,931, CNDA 2,783,217, 2,882,647, 10,024,548, 10,036,558, 10,039,289, 10,362,
OTHER PATENTS PENDING.
61638 05/16

DOMESTIC & INTERNATIONAL CE PLATE

Figure 21. Typical Oven Data Plate

SECTION 3
OPERATION

I. CONTROL FUNCTIONS

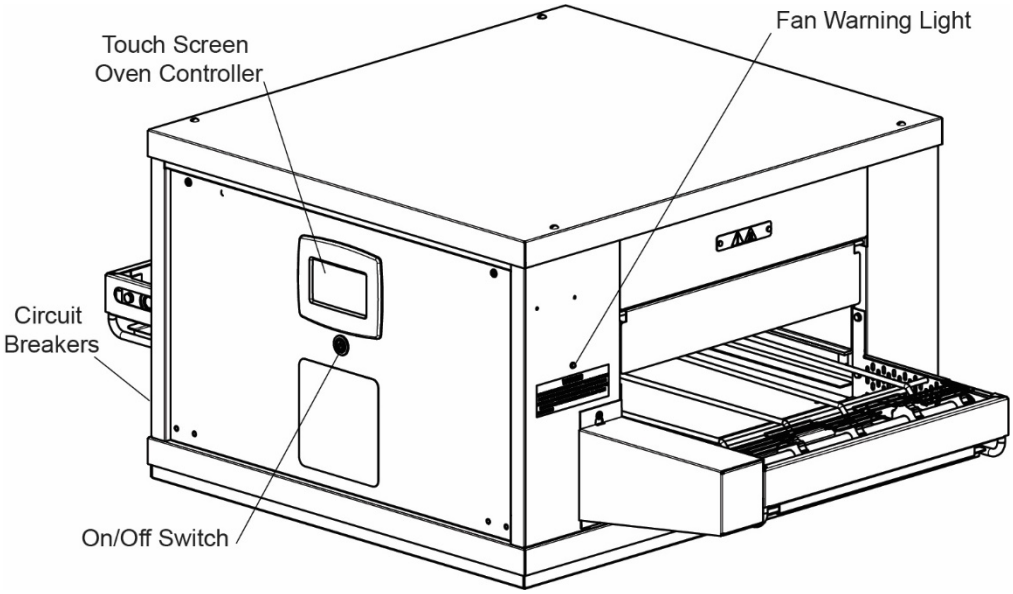

Figure 22. DZ26T/DZ33T/DZ55T-Series Oven Control Functions

> ***WARNING***
>
> ***Possibility of injury from rotating parts and electric shock.***
>
> ***Never disassemble or clean the oven with the on/off switch turned on. Turn the on/off switch off and lockout or tagout all electric power to the oven before attempting to clean or service this oven.***

II. COMPONENT INFORMATION AND LOCATION

See Figure 22.

A. Touch Screen Oven Controller

The touch screen controller controls all functions of the oven: operation, temperature and cook time adjustments, cleaning, and service.

B. Circuit Breakers

3 amp circuit breakers provide overload protection for the control circuit.

C. Fan Warning Light

The light illuminates when inside control compartment reaches 130°F (54.4°C).

D. On/Off Switch

This switch turns the oven on or off.

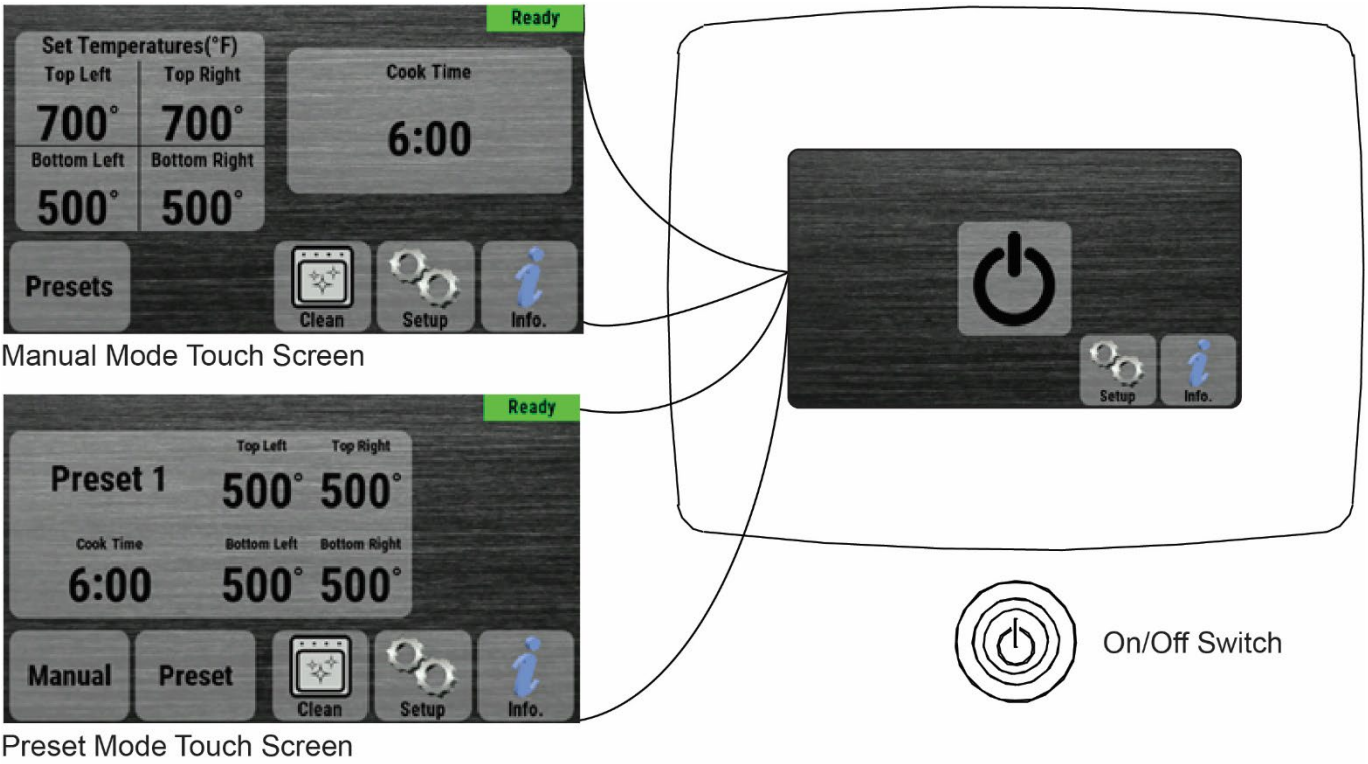

Figure 23. Control Panel

III. STEP-BY-STEP OPERATION

A. Daily Startup Procedure

1. Check that the circuit breaker/fused disconnect is in the on (closed) position.
2. Turn the on/off switch on. The screen lights up and first displays the software revisions levels for the User Interface (UI), Input/Output (I/O Board), and Motor Control (MC) software. Then the screen shows a large on/off button, along with Setup and Info.
3. Touch the large onscreen on/off button. The screen shows either the Manual Mode touch screen or the Preset Mode touch screen, depending on the mode the oven was in when last turned off. See Figure 23. The screen will show “Not Ready” at the upper right until the oven heats to the displayed temperatures and the conveyor reaches the displayed speed.

NOTE: If the touch screen is in Manual Mode and you want to operate in Preset Mode, touch and hold the Presets button for 1 to 2 seconds. If the touch screen is in Preset Mode and you want to operate in Manual Mode, touch and hold the Manual button for 1 to 2 seconds.

Operating in Preset Mode:

NOTE: If the Preset Mode touch screen shows the preset you want to use and “Ready” appears in the upper right, the oven has heated to the displayed temperatures and the conveyor is running at the displayed speed. The oven is ready to use.

4. To select a different preset, touch the Preset button.

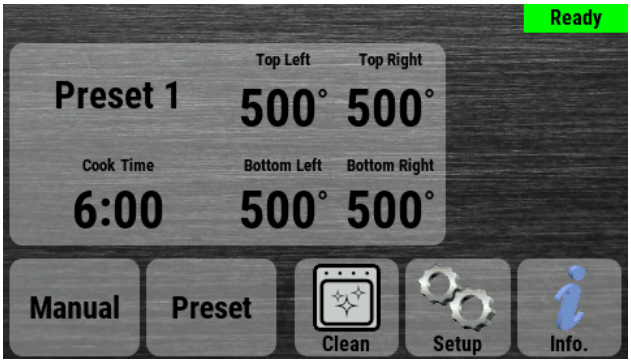

5. Touch the preset you want to use. That preset becomes highlighted in green and activates.

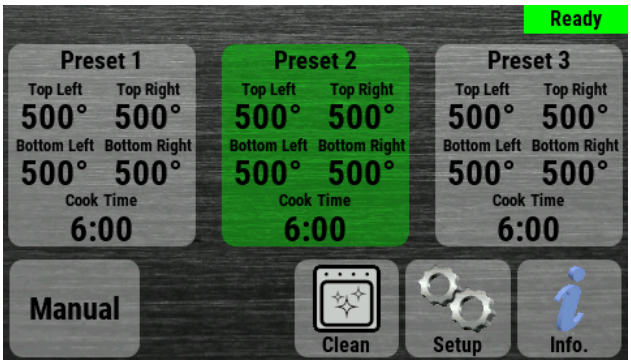

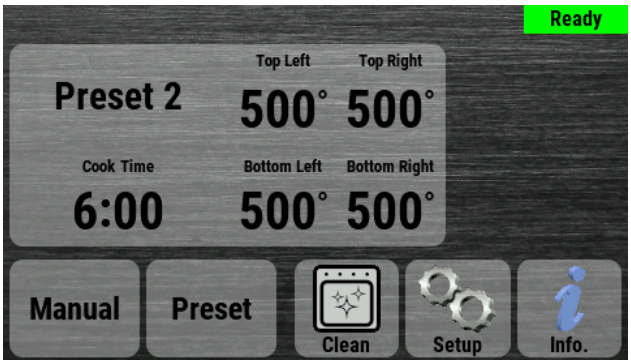

Operating in Manual Mode:

NOTE: If the Manual Mode touch screen shows the settings you want to use and “Ready” appears in the upper right, the oven has heated to the displayed temperatures and the conveyor is running at the displayed speed. The oven is ready to use.

4. To make an adjustment to a temperature setting (for example, Top Left), touch that temperature within the “Set Temperature” area of the screen.

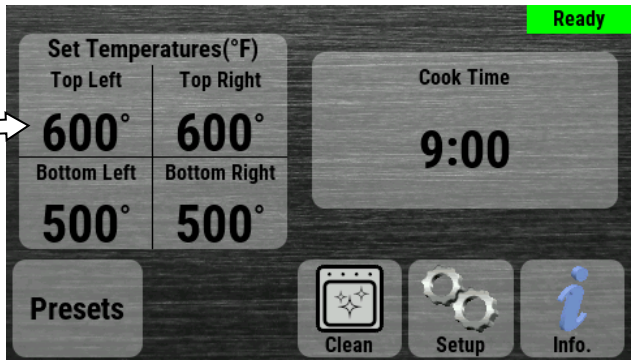

5. When the Set Temperature screen appears, enter a new temperature (for example, 7 - 0 - 0). The new temperature appears in the green highlighted area of the Set Temperature screen.
6. In the lower right area of the screen, choose if you want to Save the new temperature to Left Only or Both. (If you had started with a right setting, the choice would be Right Only or Both.) The Manual Mode touch screen appears with the new temperature settings.

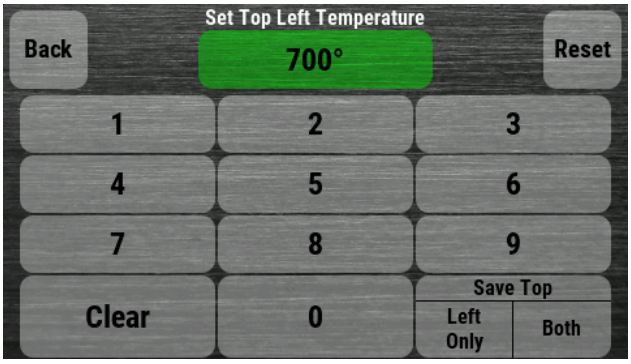

7. To make an adjustment to a cook time setting, touch the “Cook Time” on the screen. The cook time is shown onscreen in minutes and seconds (for example, 6:00 is 6 minutes and zero seconds).

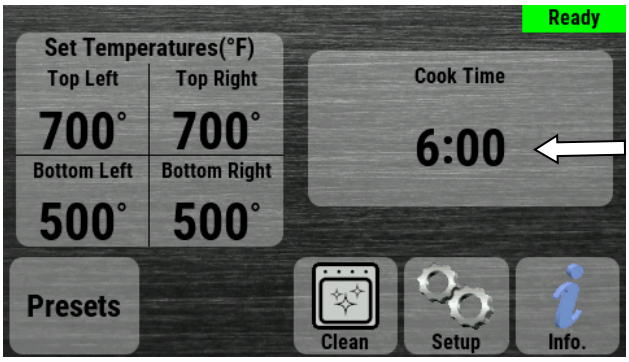

8. When the Set Belt Time screen appears, enter the new time in minutes and seconds (for example, 9 - 0 - 0 is 9 minutes and zero seconds). The new cook time appears in the green highlighted area of the Set Belt Time screen.
9. Touch OK in the lower right area of the screen. The Manual Mode touch screen appears with the new cook time setting.

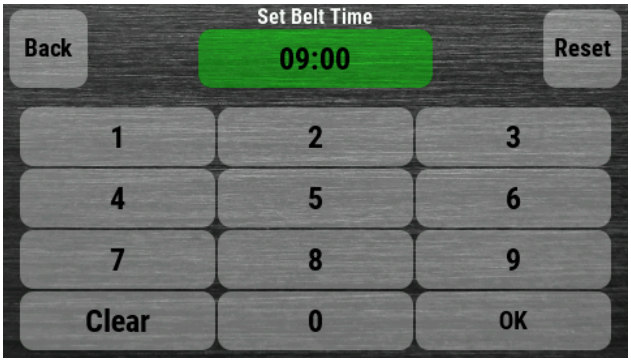

B. Daily Shutdown Procedure

1. Make sure there are no products left on the conveyor inside the oven.
2. Turn the on/off switch off.
3. Follow the daily cleaning procedure in Section 4 Maintenance.
4. The cooling fan will continue to operate until the oven temperature has dropped to 200 °F (93 °C).

IV. TOUCH SCREEN ADJUSTMENTS

A. Setup Mode

Entering the Setup Mode:

1. From the Manual or Preset main screen, touch the Setup button. The Passcode screen appears.

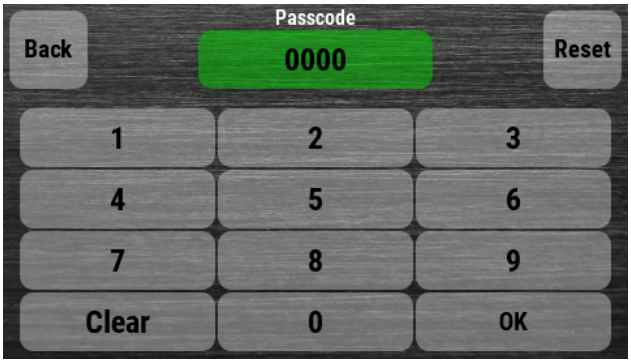

2. Enter the passcode 1 - 3 - 9 - 7. The number in the green highlighted area changes to 1397, then the Settings screen appears.

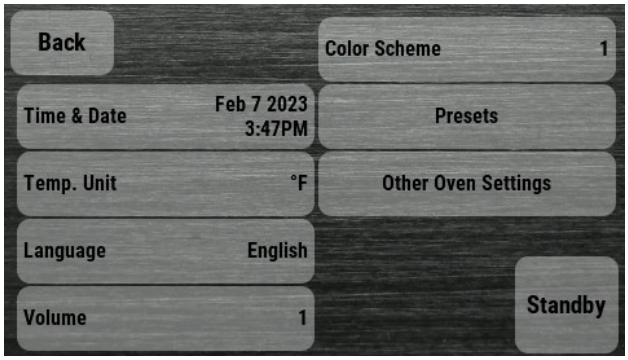

Changing Time & Date:

1. On the Settings screen, touch the Time & Date button. The Set Time & Date screen appears.
2. To change the time, enter a new time (for example, 1 - 0 - 4 - 2 for 10:42). The new setting appears in the green highlighted area of the Set Time & Date screen.
3. To change between AM and PM, touch the AM or PM button located between the time and the date.

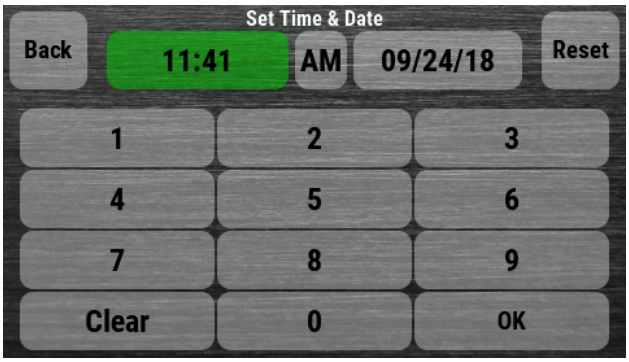

4. To change the date, touch the date button. Enter a new date (for example, 0 - 8 - 0 - 1 - 1 - 8 for August 1, 2018). The new setting appears in the green highlighted area of the Set Time & Date screen.
5. To save the new settings, touch the OK button in the lower right area of the screen. The screen returns to the Settings screen.

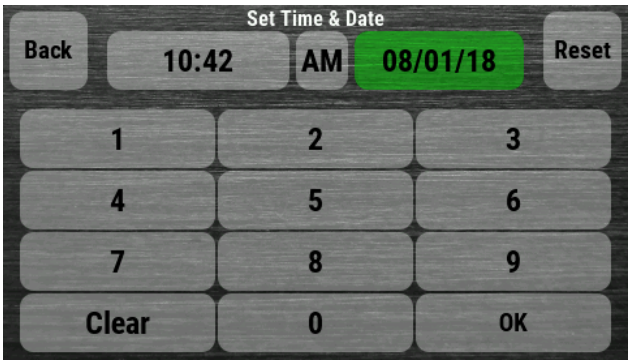

Changing Temperature Unit:

On the Settings screen, touch the Temp. Unit button to change between °F and °C.

Changing Language:

This feature is not operational at this time.

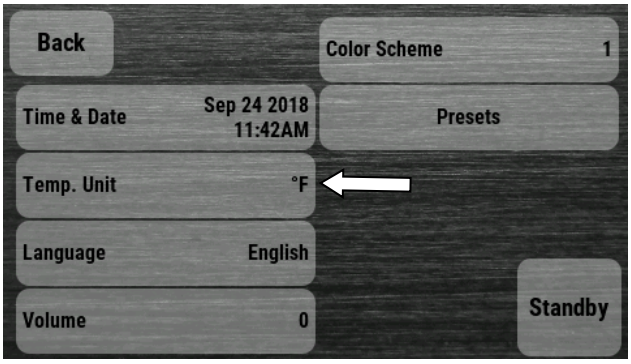

Changing Volume:

The Volume button allows the user to change the volume of the audible interface when buttons are touched. To change the volume, touch the Volume button. With each touch, the number on the button increases by 1. A volume setting of “10” is the loudest, and the next touch after 10 reaches “0”, which is a mute setting.

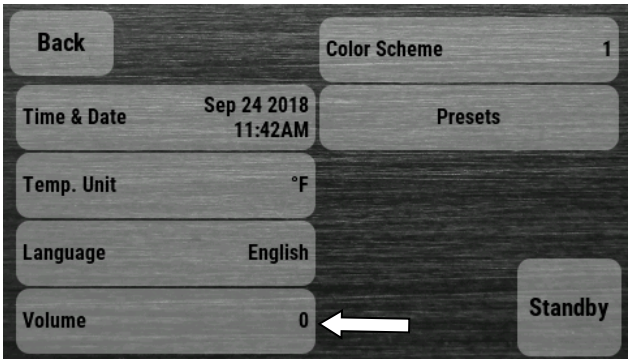

Changing Color Scheme:

You may change the appearance of the touch screen to one of 8 available color schemes.

1. To change the color scheme, touch the Color Scheme button. With each touch, the number on the button increases by 1 and the screen immediately changes to the next color scheme.
2. To select a scheme, touch the Back button in the upper left area of the Settings screen to save the setting.

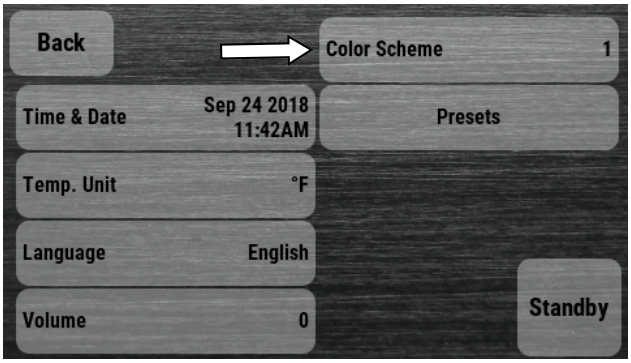

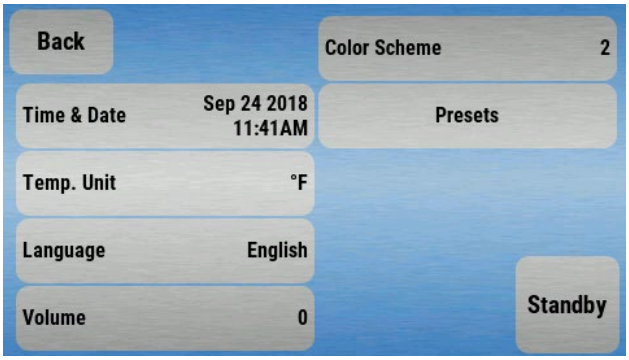

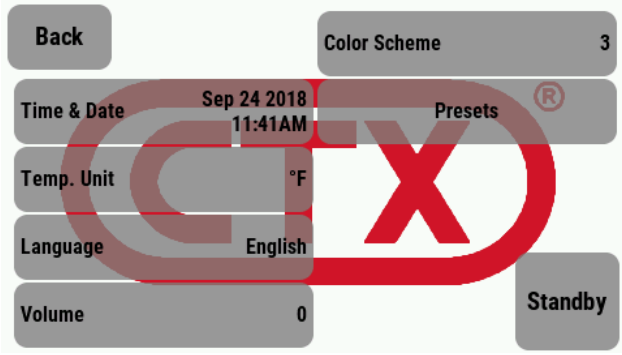

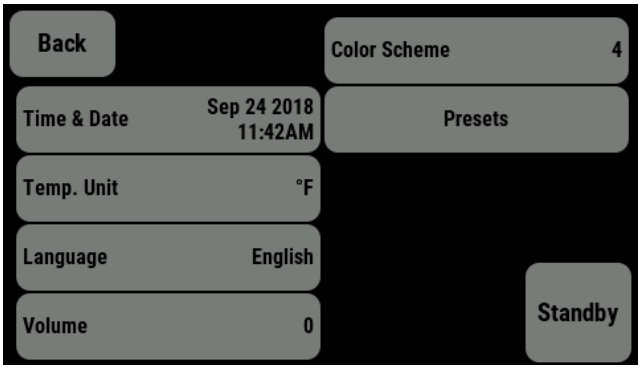

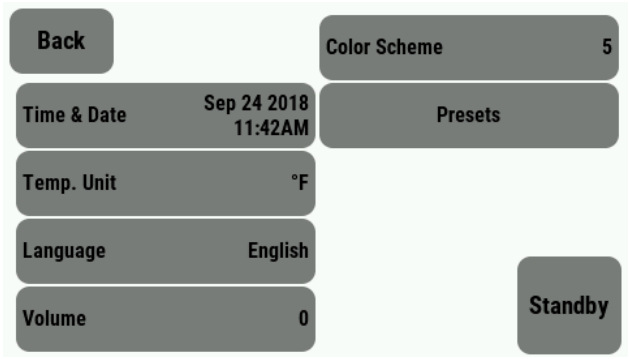

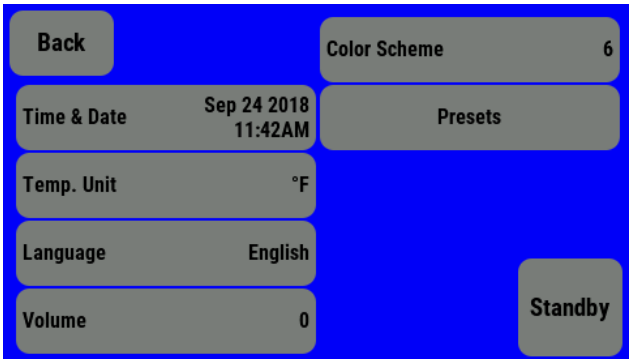

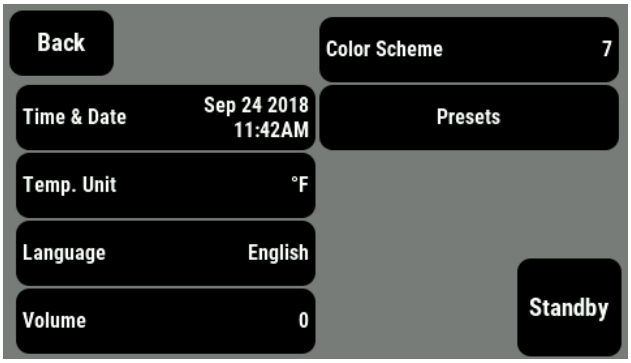

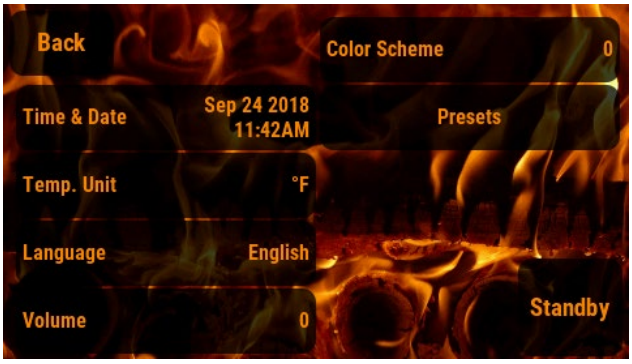

Making Changes to a Preset:

1. On the Settings screen, touch the Presets button. The Preset Change screen appears.

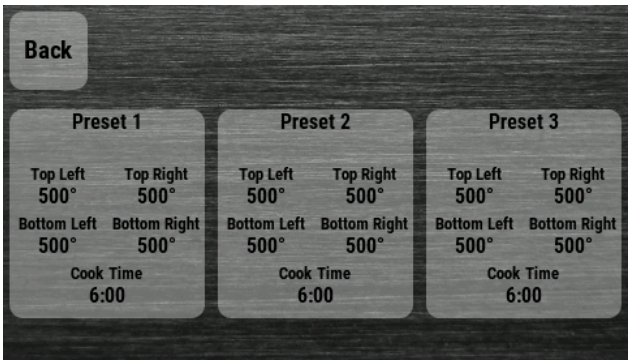

2. Touch the preset you want to change (for example, Preset 1). The chosen preset screen appears.

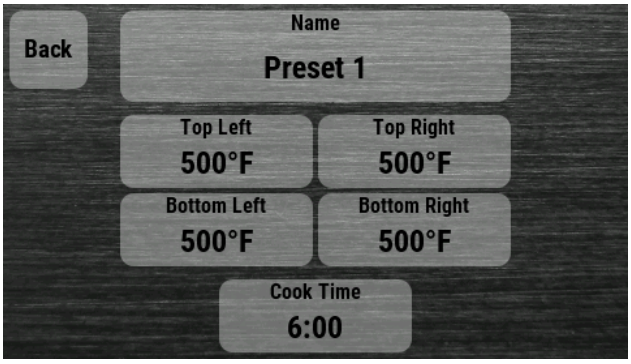

3. To change the name of the preset to a product, touch the Name button. A keyboard screen appears.
4. Enter the new name using the keyboard (for example, Chicken Breast). To change between upper and lower case letters, touch the aAbB button.

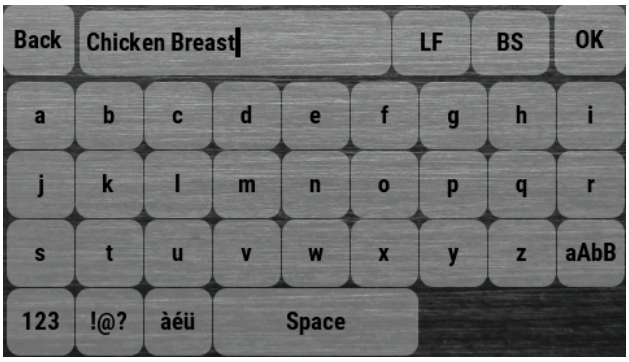

5. To save the new name, touch the OK button on the upper right area of the screen. The Preset Change screen reappears with the changed name.
6. To make a change to a temperature setting (for example, Top Left), touch that temperature.

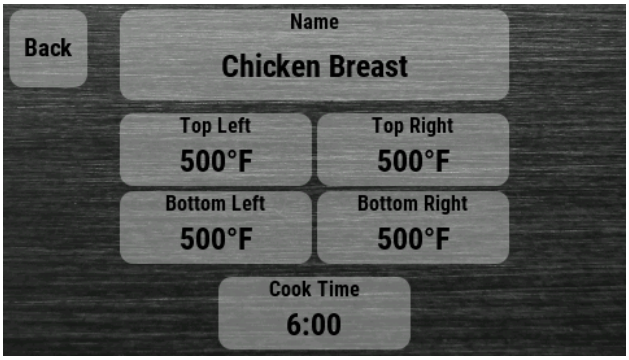

7. When the Set Temperature screen appears, enter a new temperature (for example, 8 - 7 - 5). The new temperature appears in the green highlighted area of the Set Temperature screen.

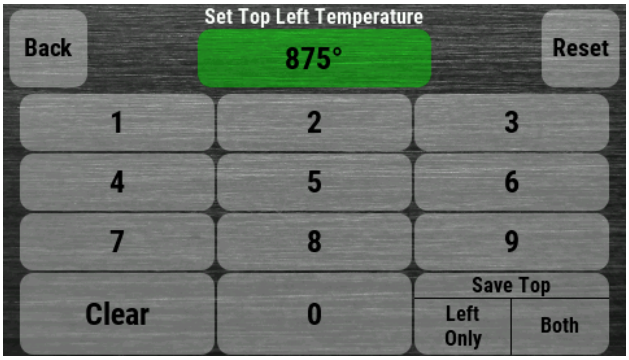

8. In the lower right area of the screen, choose if you want to Save the new temperature to Left Only or Both. (If you had started with a right setting, the choice would be Right Only or Both.) The chosen preset screen reappears with the new temperature settings.
9. Change more of the temperature settings in the same manner (steps 6 to 8).
10. To make a change to a cook time setting, touch the “Cook Time” or “Front Belt” button on the screen.

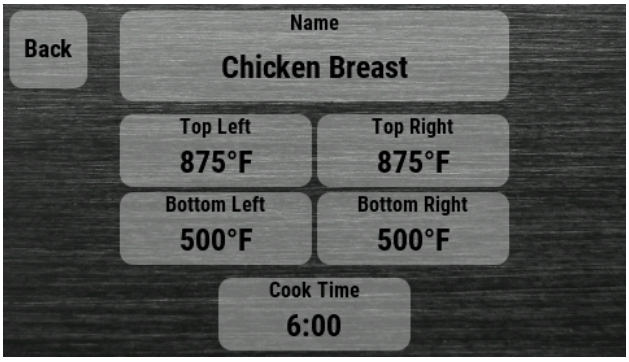

11. When the Set Belt Time screen appears, enter the new time in minutes and seconds (for example, 7 - 0 - 0 is 7 minutes and zero seconds). The new cook time appears in the green highlighted area of the Set Belt Time screen.

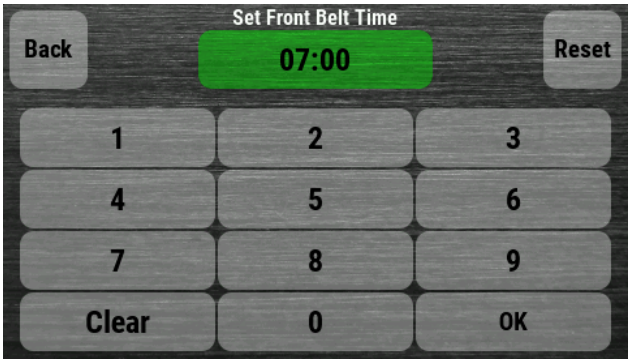

12. Touch OK in the lower right area of the screen. The chosen preset screen appears with the new cook time setting.
13. In the case of a split belt conveyor, change the “Rear Belt” in the same manner (steps 10 to 12).

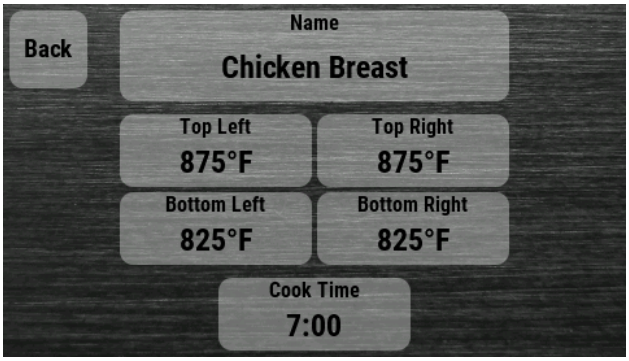

14. When all desired settings on the chosen preset have been changed, touch the Back button. The Preset Change screen reappears.

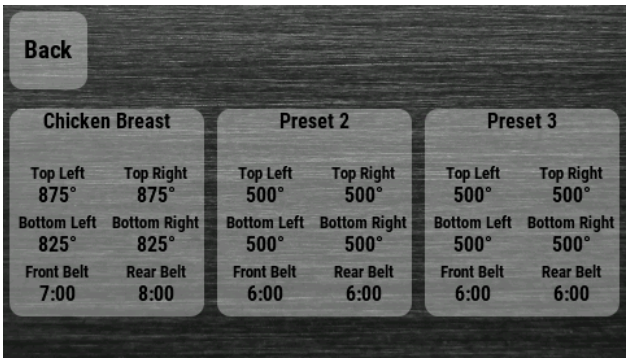

15. Press the Back button one more time to return to the Settings screen.

NOTE: To change another Preset, touch the Preset button from the Settings screen and start the process again.

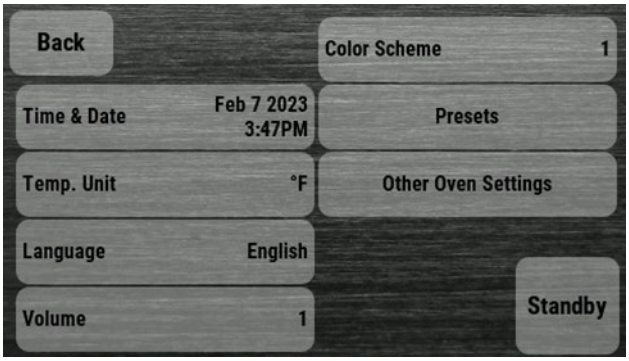

Other Oven Settings

On the “Other Oven Settings” screen the operator can change the belt direction.

1. Touch the “Belts and Motors” button to access the Belt direction screen.
2. To change the belt direction touch either the “Front Belt Direction” or the “Rear Belt Direction” button and the display will change to reflect the opposite direction (R-L in this case).
3. To exit this screen and save the data simply touch the “Back” button.

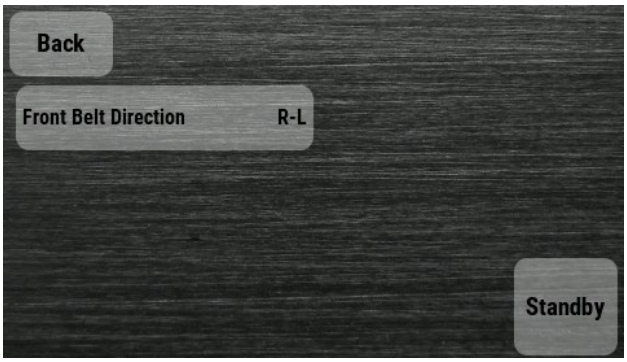

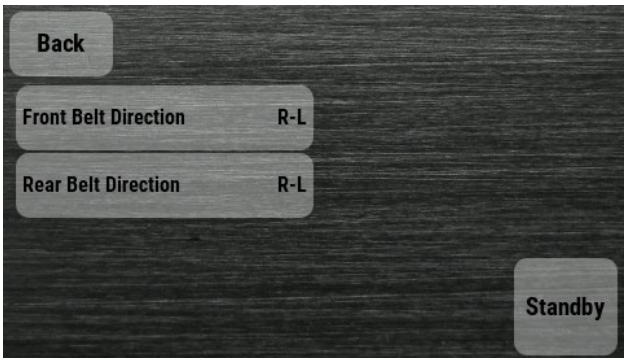

Exiting the Setup Mode:

From the Settings screen, touch the Back button to return to the Preset Mode with the preset changed and saved.

B. Standby Mode

The Standby Mode is a feature which puts the oven into an additional energy-saving state which reduces the temperature by 25% during times when usage is slower.

1. To enter the Standby Mode, touch the Setup button.
2. When the Passcode screen appears, enter the passcode 1 - 3 - 9 - 7. The Settings screen appears.
3. Touch the Standby button on the bottom right of the Settings screen. The Standby screen appears and the timer begins counting up to show how long the oven has been in this mode.
4. To exit the Standby Mode, touch the Cancel button. The screen will return to the Settings screen.
5. Touch the Back button on the Settings screen to return to the previous mode of operation.

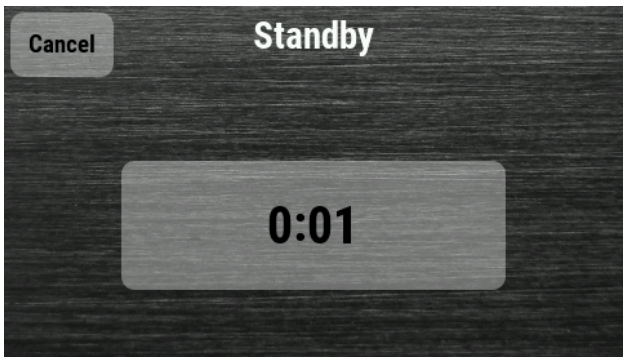

C. Info Mode

The Info Mode is a feature which shows the actual temperatures and belt speeds onscreen while operating.

Viewing Information in Manual Mode:

To view the actual temperatures and belt speeds in Manual Mode, touch the Info. button. The actual values appear in a smaller size above the settings. In the bottom center, the screen displays information for User Interface (UI), Input/Output (IO), and Motor Control (MC) software. For ovens with split belt operation, both Motor Control 1 (MC1) and Motor Control 2 (MC2) software displays.

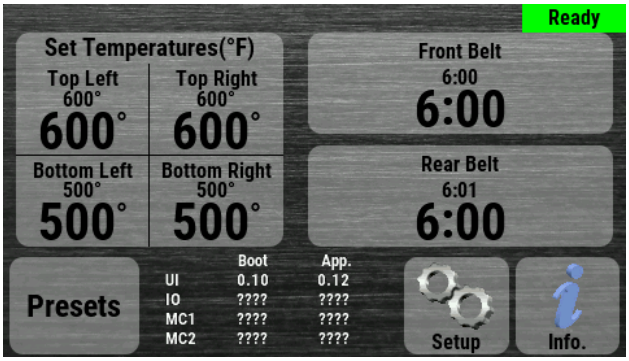

Viewing Information in Preset Mode:

To view the actual temperatures and belt speeds in Preset Mode, touch the Info. button. The actual values appear in a smaller size above the settings. In the bottom center, the screen displays information for User Interface (UI), Input/Output (IO), and Motor Control (MC) software. For ovens with split belt operation, both Motor Control 1 (MC1) and Motor Control 2 (MC2) software displays.

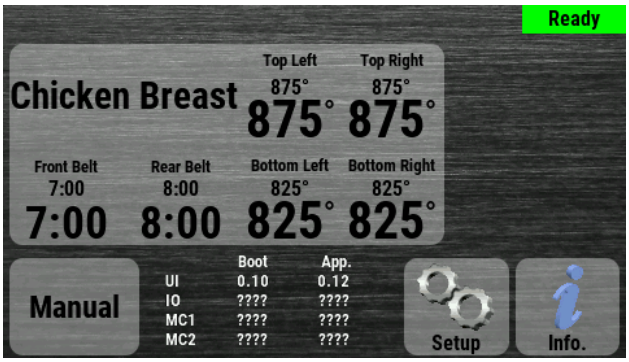

V. QUICK REFERENCE: FAULTS

Fault messages are only displayed on the main screens of Manual Mode and Preset Mode. If a message is displayed, touch the screen to acknowledge the fault.

MESSAGE DISPLAYED	EXPLANATION	CORRECTIVE ACTION
IO_COMM_LOST*	IO Communications Fault Communication between the User Interface and Input/Output (IO) has been interrupted for 15 seconds. The oven beeps and displays the message.	Acknowledge the fault. If the fault message returns, call for service.
MC1_COMM_LOST	Front MC Communications Fault Communication between the User Interface and Front Motor Control (MC1) has been interrupted for 5 seconds. The oven beeps and displays the message.	Acknowledge the fault. If the fault message returns, call for service.
MC2_COMM_LOST	Rear MC Communications Fault Communication between the User Interface and Rear Motor Control (MC2) has been interrupted for 5 seconds. The oven beeps and displays the message.	Acknowledge the fault. If the fault message returns, call for service.
PROBE_TL_FAULT PROBE_TR_FAULT PROBE_BL_FAULT PROBE_BR_FAULT	Probe Open: Top Left Probe Open: Top Right Probe Open: Bottom Left Probe Open: Bottom Right The temperature in the zone has exceeded 1400°F (760°C) for more than 5 seconds. The oven beeps and displays the message.	Acknowledge the fault. If the fault message returns, call for service.
FAN_HIGH_CURRENT	High Current: Fan The fan current has exceeded the set limit for more than 5 seconds. The oven beeps and displays the message.	Acknowledge the fault. If the fault message returns, call for service.
MC1_HIGH_CURRENT MC2_HIGH_CURRENT	High Current: Front MC High Current: Rear MC The motor current has exceeded the set limit for more than 5 seconds. The oven beeps and displays the message.	Clear any items jamming the conveyor and acknowledge the fault. If the fault message returns, call for service.
LIMIT BOARD HIGH TEMP	Limit Board Tripped The temperature at the limit board has exceeded 1075°F (579°C) for more than 5 seconds. The oven beeps and displays the message.	Acknowledge the fault. If the fault message returns, call for service.

CONTROL COMPARTMENT HIGH TEMP	High Temp: Control Compartment The temperature in the control compartment has exceeded the set limit for more than 5 seconds. The oven beeps, the Cooling Fan Warning lights up, and the touch screen displays the message.	Check cooling fan for proper operation and cleanliness. Clean the fan if necessary (see II. MAINTENANCE – WEEKLY). Acknowledge the fault. If the fault message returns, call for service.
LIMIT BOARD PROBE FAULT	Limit Board: Probe Fault The temperature at the limit board is too high to be accurately sensed for more than 5 seconds. The oven beeps and displays the message.	Acknowledge the fault. If the fault message returns, call for service.
FAN LOW CURRENT	Low Current: Fan The fan current has fallen below the set limit for more than 5 seconds. The oven beeps and displays the message.	Acknowledge the fault. If the fault message returns, call for service.
IO BOARD HIGH TEMP	IO Board: Tripped The temperature in any zone has exceeded 1075°F (579°C) for more than 5 seconds. The oven beeps and displays the message.	Acknowledge the fault. If the fault message returns, call for service.

*An IO Communications Fault will replace any other fault. If other faults are occurring when an IO communications fault occurs, those faults will reoccur if they are still present when IO communications resumes.

NOTE: If a fault always occurs soon after the oven is powered up, note the fault and the software version numbers that appear at touch screen start-up and call for service.

VI. COOKING IN A CTX OVEN

A. Cooking Trials

The purpose of conducting cooking trials is to determine the exact temperature settings and cooking time needed to produce best results with your specific product. The fastest and easiest way to conduct these trials is to start with settings already established for product similar to yours. We recommend they be used as beginning set points for your tests.

Testing can be completed easier and faster and with less confusion if you keep accurate records of each test. Choose your first product for test and look it up in the tables in the Time and Temperature Guide. Now program the oven with the temperatures and cook times shown.

NOTE: If you are starting the oven from “cold” please allow 30 minutes heat up time. The elements cycle after approximately 15 minutes, however, allow additional time for the oven chamber to become stabilized and evenly saturated with heat.

Begin your first trial run. Examine the finished product and evaluate it based on the following guidelines.

RESULTS	SOLUTION
Outside too dark or burned	Reduce Temperatures
Outside too light or not cooked	Increase Temperatures
Inside Overdone or dried out	Shorten Cooking Time
Inside Underdone or raw	Lengthen Cooking Time

NOTE: Sometimes an increase in temperature may require a corresponding decrease in cooking time. Conversely a decrease in temperature may require a corresponding increase in cooking time.

After evaluating the results, make the indicated time/temperature setting adjustments and allow about 15 minutes for the oven to stabilize at the new temperature settings. It may be necessary to run several tests before you obtain the exact results you want.

B. Loading the Conveyor

Achieving maximum production is dependent on proper utilization of the conveyor belt. Depending on size, pans can be placed on the conveyor belt in a variety of configurations to best utilize the space available.

The following illustrations show placement of various size round and square pans to achieve maximum production rates. Pans in other sizes or shapes will require different placement. You will have to determine the best placement configuration for your pans. **Do not place pans off the edge of the belt or allow them to overhang.**

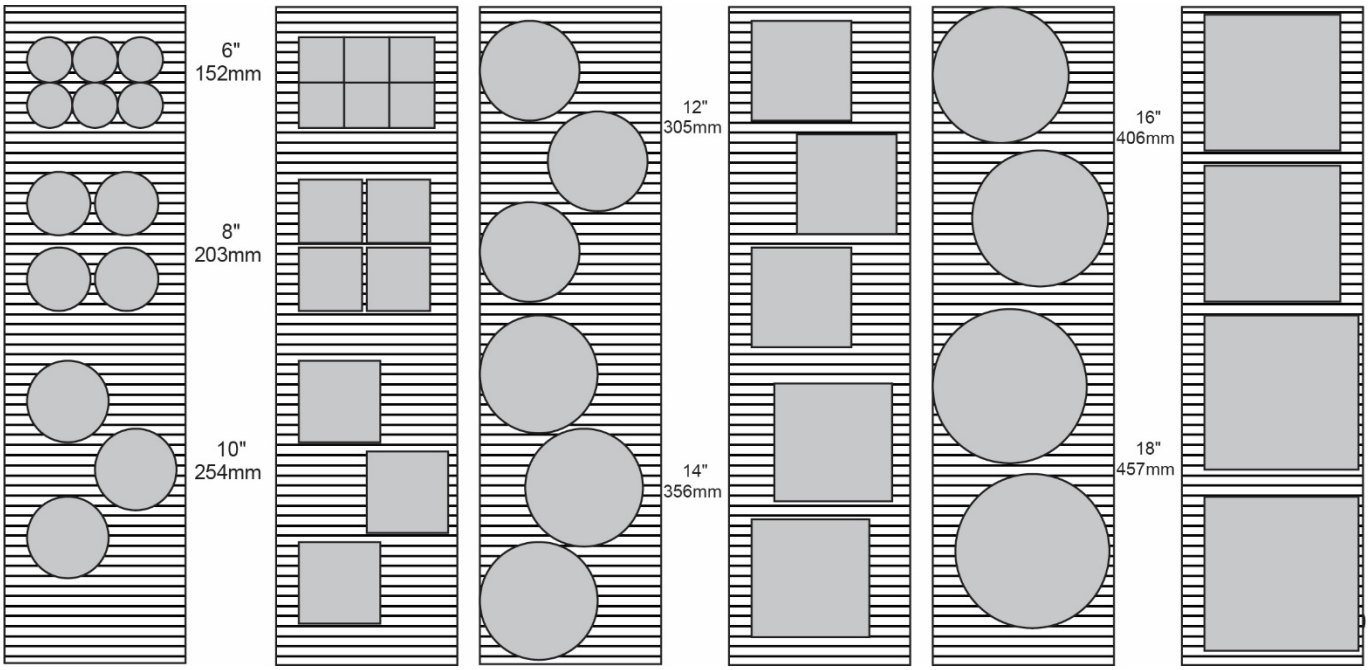

Record Time and Temp Table

Product	Zone Temperatures		Cook Time Min.	Pan Type and Size	Amount Weight or Count	State
	Entrance	Exit				
	Top / Bott	Top / Bott				

NOTES

SECTION 4
CLEANING AND MAINTENANCE

WARNING

Before ANY cleaning or servicing of the oven, perform the following procedure:

1. Switch off the oven and allow it to cool. Do NOT service the oven while it is warm.
2. Turn off the electric supply circuit breaker(s) and disconnect the electric supply to the oven.

When all cleaning and servicing is complete:

1. If the oven was moved for servicing, return the oven to its original location.
2. If the restraint cable was disconnected to clean or service the oven, reconnect it at this time.
3. Reconnect the electrical supply.
4. Turn on the electric supply circuit breaker(s).
5. Perform the normal start-up procedure.

WARNING

Possibility of injury from rotating parts and electrical shock exist in this oven. Switch off and lockout/tagout the electric supply BEFORE beginning to disassemble, clean, or service any oven. Never disassemble or clean an oven with the on/off switch turned on.

NOTICE

NEVER use a water hose or pressurized steam-cleaning equipment when cleaning this oven. To avoid saturating the oven insulation, DO NOT use excessive amounts of water. DO NOT use a caustic oven cleaner, which can damage the bake chamber surfaces. Do not use a green scrub pad on any parts of the CTX oven.

NOTICE

ANY replacement parts that require access to the interior of the oven may ONLY be replaced by a Middleby Marshall Authorized Service Agent. It is also strongly recommended that the 3-Month Maintenance and 6-Month Maintenance procedures in this section be performed ONLY by a Middleby Marshall Authorized Service Agent.

I. CLEANING - DAILY

A. Daily Cleaning Tools

- General Purpose Cleaner
- Clean Towel
- Wire Brush
- Vacuum

B. Daily Cleaning Procedures

Prior to cleaning, turn the CTX oven off and allow to cool. Estimated daily cleaning time is 15 minutes.

1. Remove the heat curtain.

2. Wipe with a clean towel with general purpose cleaner and send through dishwasher (optional).

3. Dry and re-install the heat curtain.

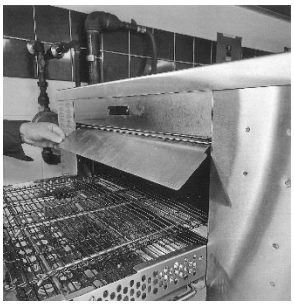

4. Remove any crumbs with wire brush.

NOTE: Belt does not need to be removed for cleaning.

5. Remove the crumb tray.

6. Wipe with a towel with general purpose cleaner and send through dishwasher (optional). Dry and re-install.

7. Remove the exit tray, wipe with a clean towel with general purpose cleaner, send through dishwasher (optional), dry and re-install.

8. Vacuum/sweep out any crumbs inside of the oven.

9. Remove fan filter, rinse with cold water and place back on when dry.

10. Wipe the top, front and sides with a clean towel with general purpose cleaner.

II. CLEANING - WEEKLY

Clean the filter of the cooling fan.

1. Lift filter off of the front panel and wipe with a clean towel.
2. Inspect the filter.
   - If dusty, briskly shake it.
   - If greasy, wash in warm soapy water, rinse, and set aside to dry completely. Middleby Marshall recommends using dish soap to break up grease.
3. Re-install filter.

NOTE: The oven interior may require cleaning more than once a month depending on the volume of baking.

Clean the oven interior.

The DZ26T/DZ33T/DZ55T Series ovens feature a self-cleaning cycle. The oven increases to the cleaning temperature when engaged, the controller counts down during the cleaning cycle, and the oven reverts to the previous mode of operation after the cycle.

NOTE: The Self Clean cycle may be required more frequently depending on the volume of baking. The Self Clean cycle can be used on a daily basis.

Middleby Marshall recommends running the Self Clean cycle at the beginning of the day to allow the oven to ramp up, clean, then revert to preset settings.

To enter Clean mode:

1. Touch and hold the Clean button for 1 to 2 seconds. The screen asks if you are sure you want to clean the oven. See Figure 24.

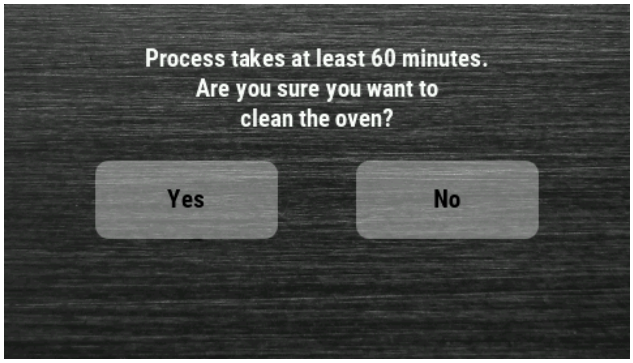

Figure 24.

2. Touch “Yes” to confirm. The oven will begin to count time up until the oven attains a temperature of 900°F (482°C) as shown in Figure 25. The 1-hour timer will then begin to count down to zero. When the cycle has ended, the oven will revert to the last mode of operation prior to going into the Clean mode.

IMPORTANT

The oven will not turn off after the Clean cycle, but will revert to the last setting prior to entering the cleaning operation.

Figure 25.

III. MAINTENANCE - EVERY 6 MONTHS

WARNING

Shut OFF all electrical power and lock/tag out the switch before attempting maintenance work.

NOTE: It is recommended that the 6-month maintenance be performed by an authorized Middleby Marshall technician.

A. Electrical Terminals

Open the control cabinet door by removing the two screws from the control cabinet door. Tighten all electrical control terminal screws including the electrical contactor terminal screws as shown in Figure 26.

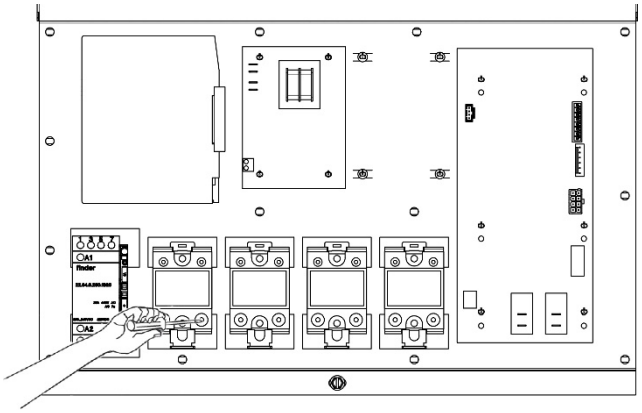

Figure 26.

B. Ventilation

Check that the air circulation throughout the oven is not blocked and is working properly.

C. Vent Check

Check your venting system.

NOTICE

- Installation of replacement parts requiring access to the interior of the oven is permitted only by an authorized service technician.
- If there are any problems with the operation of the oven, the authorized service technician must be called.
- Obtain a service contract with a manufacturer's authorized service technician.

IV. KEY SPARE PARTS KIT

An oven can be purchased with a Key Spare Parts Kit (Figure 28 or Figure 29). (The kit can be purchased when the oven is ordered, or later, from a Middleby Marshall Authorized Parts Distributor). The kit contains many of the crucial parts that can reduce serious downtime and loss of production if a failure occurs.

Replacement parts for these kits can be purchased from your Middleby Marshall Authorized Parts Distributor.

DZ26T-SERIES ELECTRIC OVEN KEY SPARE PARTS KIT (Figure 29Figure 27)

ITEM	PART NO.	DESCRIPTION	DZ26T, 208/240V	DZ26T, 380V
1	77174	Filter, Magnetic Fan	1	1
2	M9616	Fan, Cooling 24VDC	1	1
3	74916	Switch, Schurter 3-101-431	1	1
4	74902	Display, NCC Touch Screen	1	1
5	76957	Contactor, Finder Type 22.34	1	1
6	67857	Relay, 240V 75A Solid State	2	2
7	45036	Breaker, Circuit 240V 3A	1	1
8	75269	Assy, Plate 2000 208V GRV HRTH	1	-
8	77183	Assy, Plate 2000 240V GRV HRTH	1	1
9	74106	Motor, Gear 1:200 25W TELCO	1	1
10	76398	Board, Motor Drive	1	1
11	76935	Board, IO NCC YEL NON MOD	1	1
12	76979	Supply, Power 24 VDC / 60 W	1	1
13	76397	Control, High Temp Limit	1	1
14	63909	Switch, Intlck 12A NO2P	1	1
15	76593	Thermocouple, Type K 11.125 LG	2	2
16	70756	Spring, Smalley Steel C050-L9	2	2
17	70697	Housing, Thermocouple	2	2

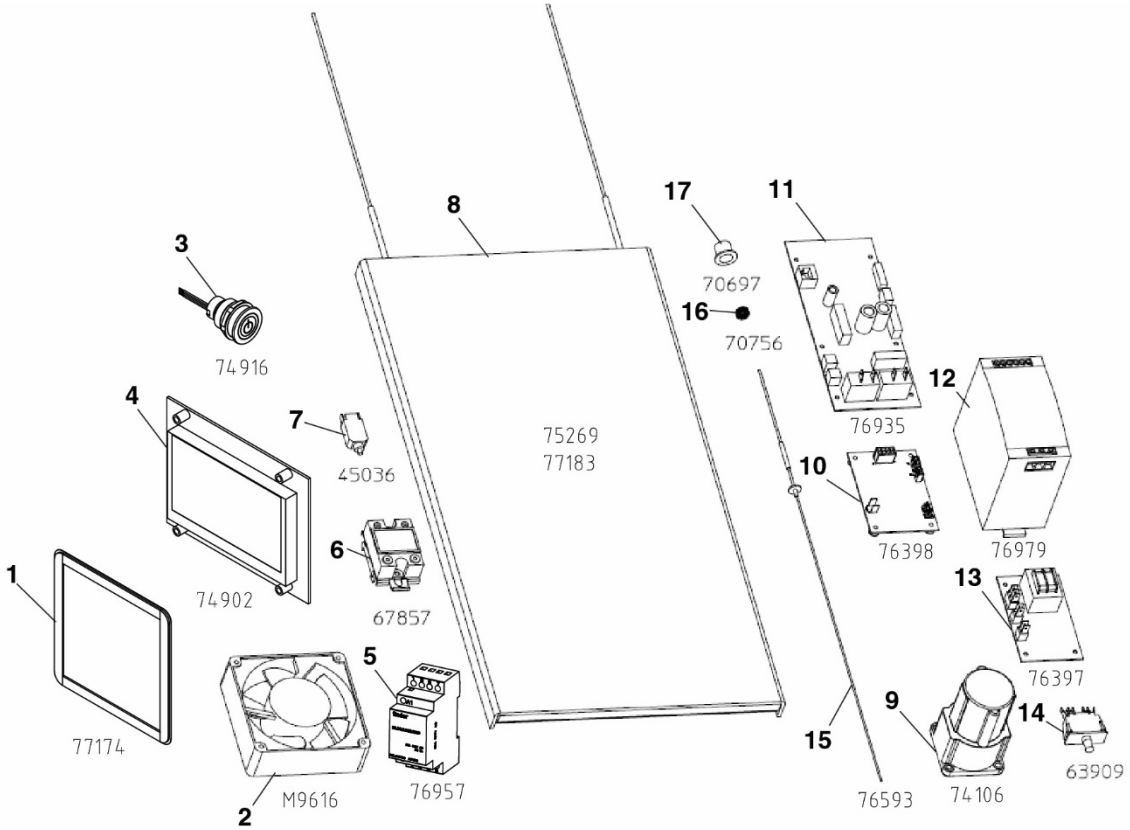

Figure 27.

DZ33T-SERIES ELECTRIC OVEN KEY SPARE PARTS KIT (Figure 28)

ITEM	PART NO.	DESCRIPTION	DZ33T, 208/240V	DZ33T, 380/415V
1	77174	Filter, Magnetic Fan	1	1
2	M9616	Fan, Cooling 24VDC	1	1
3	74916	Switch, Schurter 3-101-431	1	1
4	74902	Display, NCC Touch Screen	1	1
5	67975	Contactor 4 pole	1	1
6	67857	Solid state relay	2	2
7	45036	3A Circuit breaker	1	1
8	77351	208V Hearth plate	1	0
8	77353	240V Hearth plate	1	1
9	74106	Gear motor	1	1
10	76398	Motor control board	1	1
11	75037	I/O board	1	1
12	76979	24V power supply	1	1
13	76397	High limit board	1	1
14	63909	Interlock switch	1	1
15	70698	Thermocouple	2	2
16	70756	Spring	2	2
17	70697	Thermocouple Housing	2	2

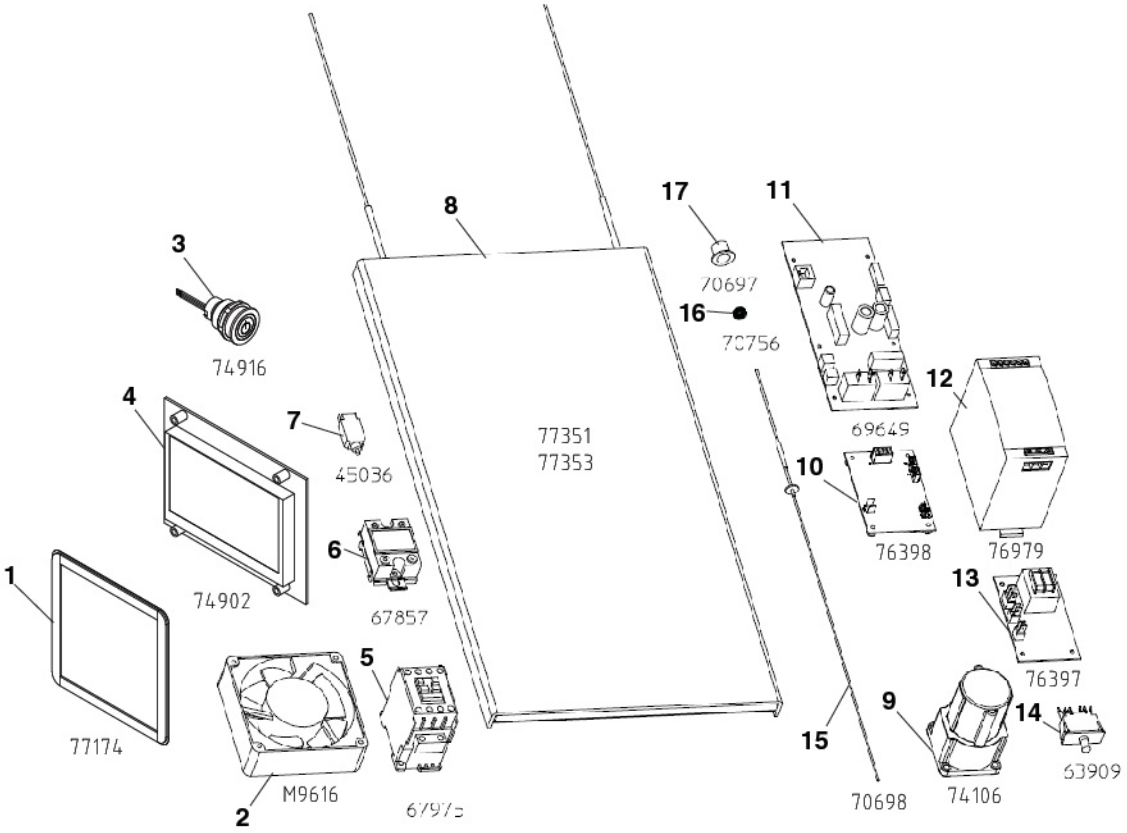

Figure 28.

DZ55T-SERIES ELECTRIC OVEN KEY SPARE PARTS KIT (Figure 29)

ITEM	PART NO.	DESCRIPTION	DZ26T, 208/240V	DZ26T, 380V
1	77174	Filter, Magnetic 140mm Fan	1	1
2	M9616	Fan, Cooling 24VDC	1	1
3	74916	Switch, Schurter 3-101-431	1	1
4	74902	Display, NCC Touch Screen	1	1
5	78210	Contactor, 208/240/50/60 4P 75A	1	1
6	67857	Relay, 240V 75A Solid State	2	2
7	45036	Breaker, Circuit 240V 3A	1	1
8	78051	Assy, Plate Grooved 104V 2500W	1	-
8	78054	Assy, Plate Grooved 120V 2500W	1	1
9	74106	Motor, Gear 1:200 25W TELCO	1	1
10	76398	Board, Motor Drive	1	1
11	75037	Board, IO NCC BLUE MOD	1	1
12	76979	Supply, Power 24 VDC / 60 W	1	1
13	76397	Control, High Temp Limit	1	1
14	63909	Switch, Intlck 12A NO2P	1	1
15	70698	Thermocouple, Type K 14.250 LG	2	2
16	70756	Spring, Smalley Steel C050-L9	2	2
17	70697	Housing, Thermocouple	2	2

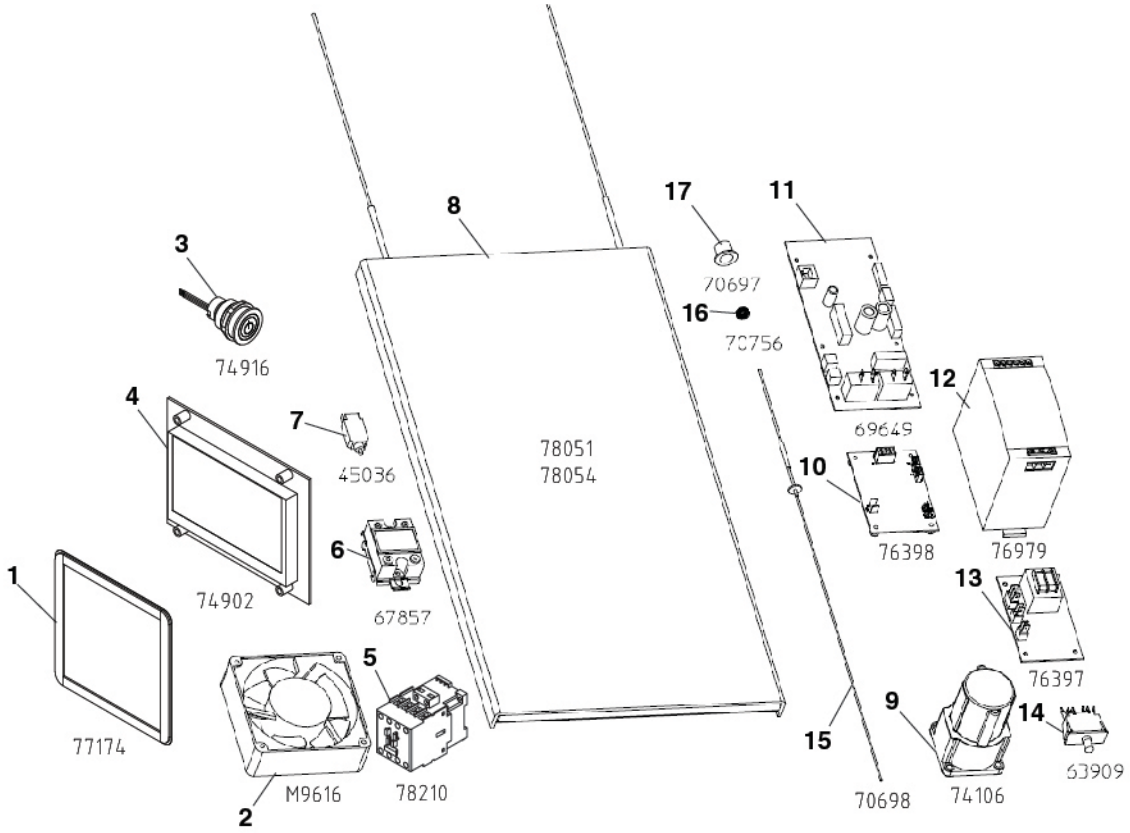

Figure 29.

SECTION 5
TROUBLESHOOTING

SYMPTOM	PROBLEM	SOLUTION
Conveyor belt stops completely or intermittently.	• Check to see if drive roller is turning.	1. Check for objects jammed in conveyor and remove. 2. Turn oven off, reset the circuit breaker, and turn oven on. 3. If motor still does not run, call for service.
Display does not show **READY** after oven has been on for 30 min.	• Oven has not reached set temp, may be caused by a contact not closing or a failed temp probe or element.	1. Check the circuit breaker. 2. Using Info Mode, check settings and actual temperatures for all zones. If actual temps are not within ± 6°F (3°C) within 30 minutes, call for service.
Product is not cooking.	• Check cook time and temperature for proper settings, conveyor could be running too fast or temperature could be set wrong. • Check for possible air flow in the room.	1. Adjust cook time and temperature to correct settings. 2. Turn on/off switch off, then flip main circuit breakers off and on 2 or 3 times. 3. Redirect air flow.
The screen displays a fault code.	The controller has gone into a fault state.	1. See Section 3 V. QUICK REFERENCE: FAULTS for details. 2. Acknowledge the fault. If the fault message returns, call for service.

NOTES

SECTION 6
ELECTRICAL SCHEMATICS

Wiring Diagram, DZ26T, 208/240 3PH • 75324 REV B

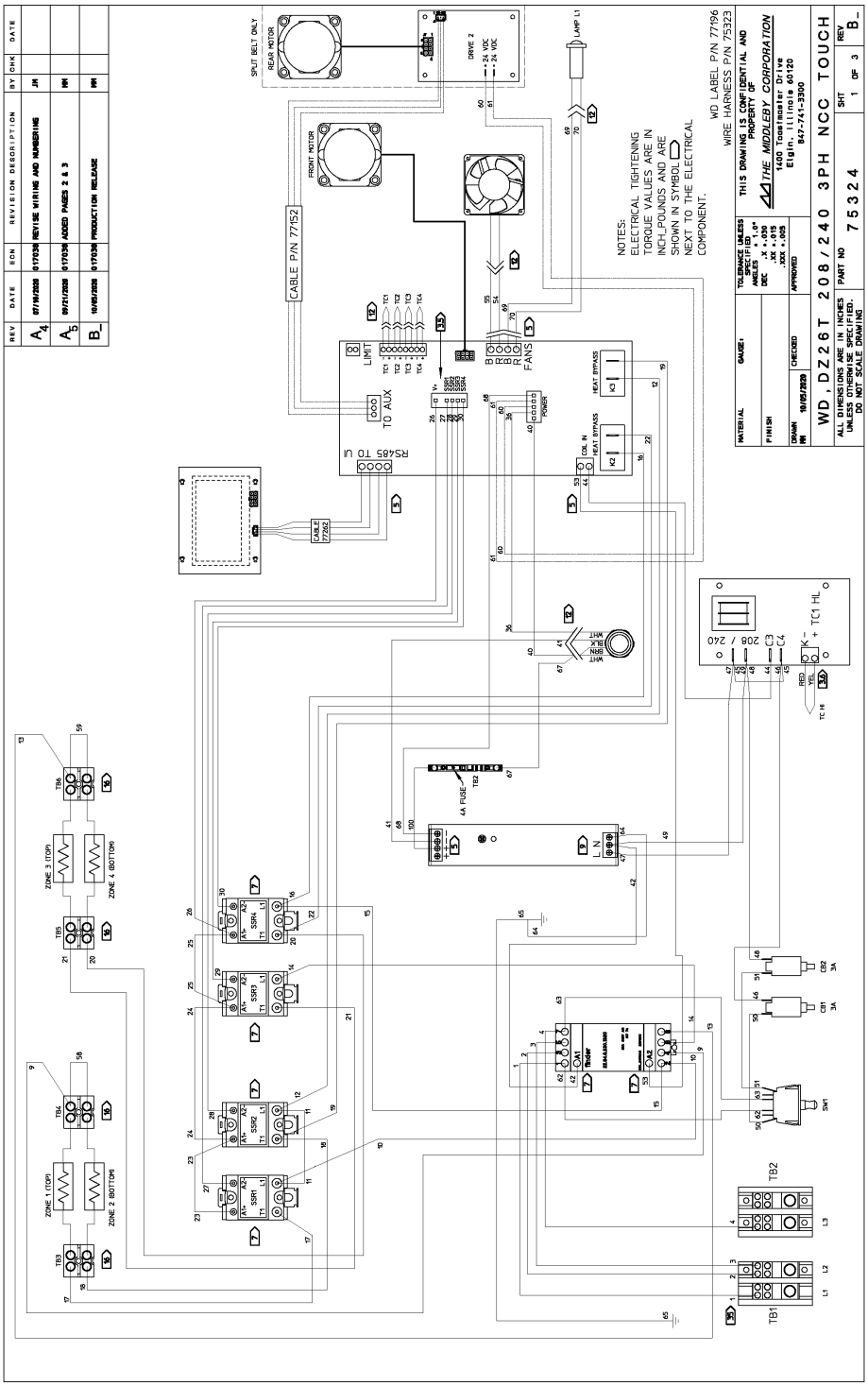

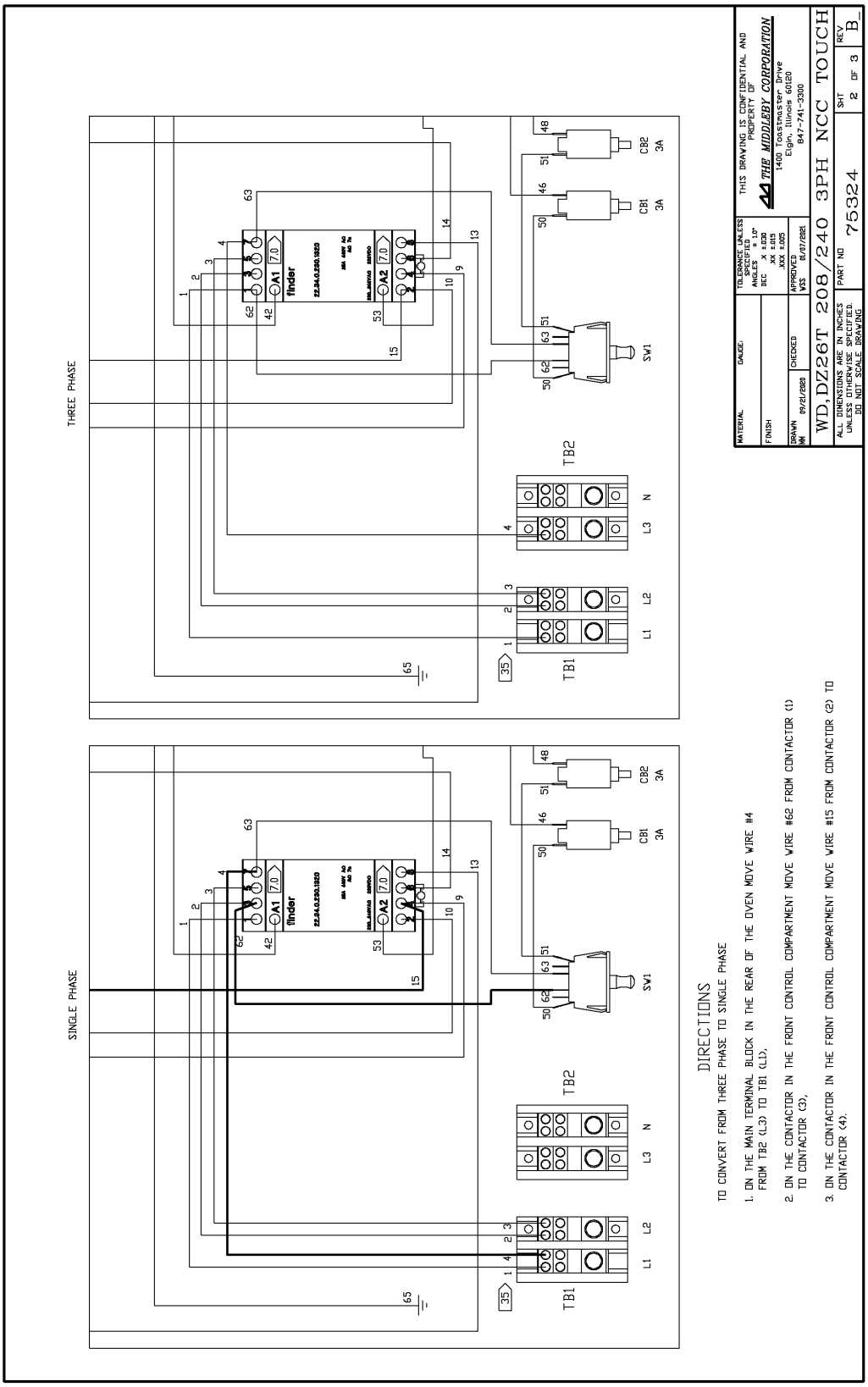
THREE PHASE
SINGLE PHASE
finder
A1
A2
TB1
TB2
L1
L2
L3
N
SW1
CB1
CB2
DIRECTIONS
TO CONVERT FROM THREE PHASE TO SINGLE PHASE
1. ON THE MAIN TERMINAL BLOCK IN THE REAR OF THE OVEN MOVE WIRE #4 FROM TB2 (L3) TO TB1 (L1).
2. ON THE CONTACTOR IN THE FRONT CONTROL COMPARTMENT MOVE WIRE #62 FROM CONTACTOR (1) TO CONTACTOR (3).
3. ON THE CONTACTOR IN THE FRONT CONTROL COMPARTMENT MOVE WIRE #15 FROM CONTACTOR (2) TO CONTACTOR (4).
THIS DRAWING IS CONFIDENTIAL AND PROPERTY OF
THE MIDDLEBY CORPORATION
1400 Toastmaster Drive
Elgin, Illinois 60120
847-741-3300
WD,DZ26T 208/240 3PH NCC TOUCH
PART NO 75324
SHT 2 OF 3
REV B

FOR REVISIONS SEE SHEET 1

DOMESTIC								
AC VOLTS	PHASE	Hz	CONNECTED KW	AVG OPERATING KW	CONNECTED LOADS (AMPS)			
					L1	L2	L3	N
208	1	50/60	8.0	4.3	38.5	38.5	-	-
208	3	50/60	8.0	4.3	25.4	25.4	16.6	-
240	1	50/60	8.0	4.3	33.3	33.3	-	-
240	3	50/60	8.0	4.3	22.1	22.1	14.4	-

TOLERANCE UNLESS SPECIFIED ANGLES ± 1.0° DEC .X ±.030 .XX ±.015 .XXX ±.005	DRAWN MM 09/22/2020 CHECKED APPROVED WSS 01/07/2021	THIS DRAWING IS CONFIDENTIAL AND PROPERTY OF THE MIDDLEBY CORPORATION 1400 Toastmaster Drive Elgin, Illinois 60120 847-741-3300

WD,DZ26T 208/240 3PH NCC TOUCH

ALL DIMENSIONS ARE IN INCHES UNLESS OTHERWISE SPECIFIED. DO NOT SCALE DRAWING	PART NO 75324	SHT 3 OF 3	REV B

Wiring Diagram, DZ26T, 380V 3PH CE • 76982 REV B

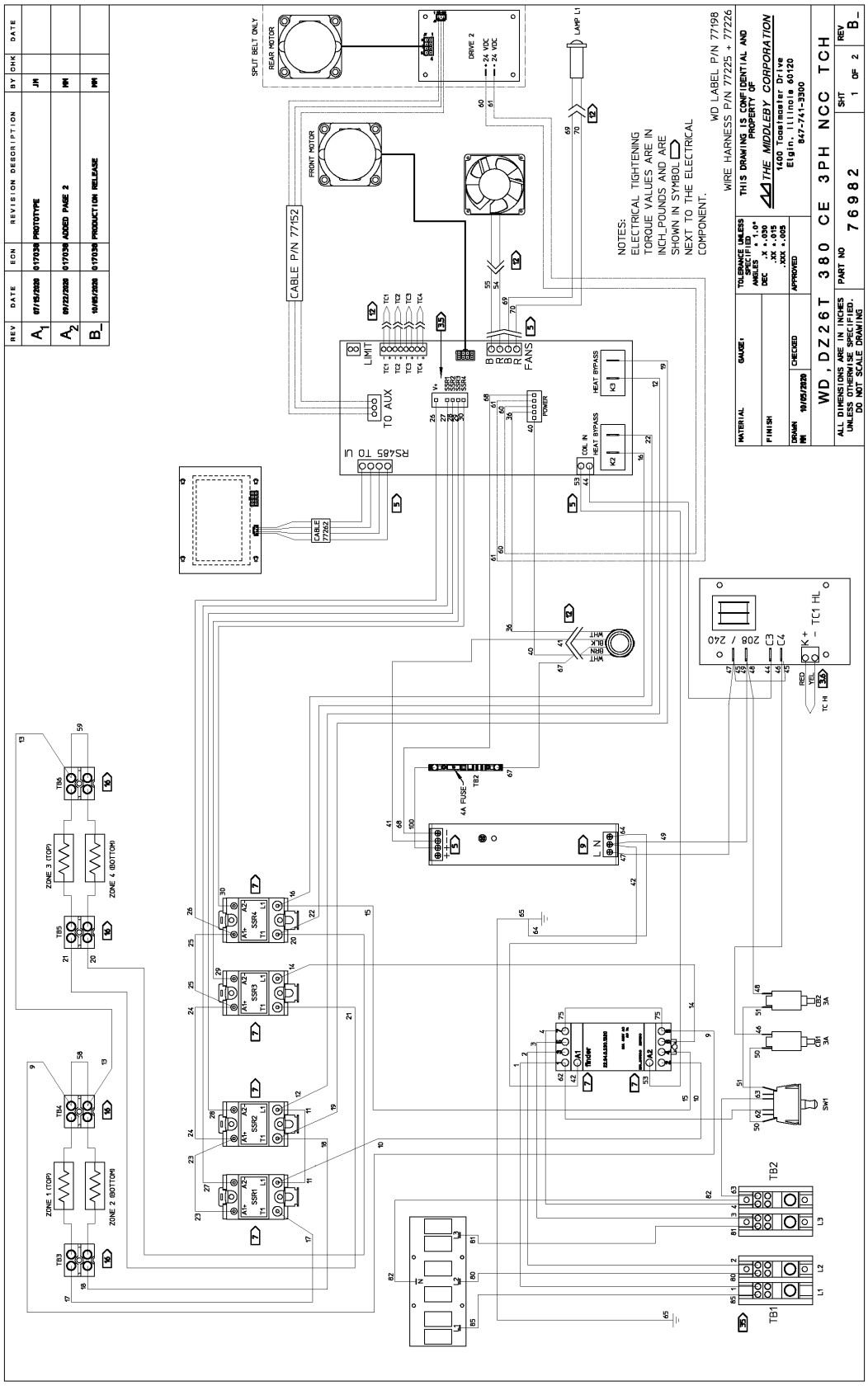

FOR REVISIONS SEE SHEET 1

INTERNATIONAL								
AC VOLTS	PHASE	Hz	CONNECTED KW	AVG OPERATING KW	CONNECTED LOADS (AMPS)			
					L1	L2	L3	N
380	3	50/60	6.7	4.3	15.3	7.7	7.7	7.7

TOLERANCE UNLESS SPECIFIED
ANGLES ± 1.0°
DEC X ±.030
.XX ±.015
.XXX ±.005

DRAWN MM 09/22/2020
CHECKED
APPROVED WSS 01/07/2021

THIS DRAWING IS CONFIDENTIAL AND PROPERTY OF
THE MIDDLEBY CORPORATION
1400 Toastmaster Drive
Elgin, Illinois 60120
847-741-3300

WD,DZ26T 380 CE 3PH NCC TCH

ALL DIMENSIONS ARE IN INCHES UNLESS OTHERWISE SPECIFIED. DO NOT SCALE DRAWING

PART NO 76982

SHT 2 OF 2

REV B

Wiring Diagram, DZ26T, 230V 1PH CE • 76983 REV B

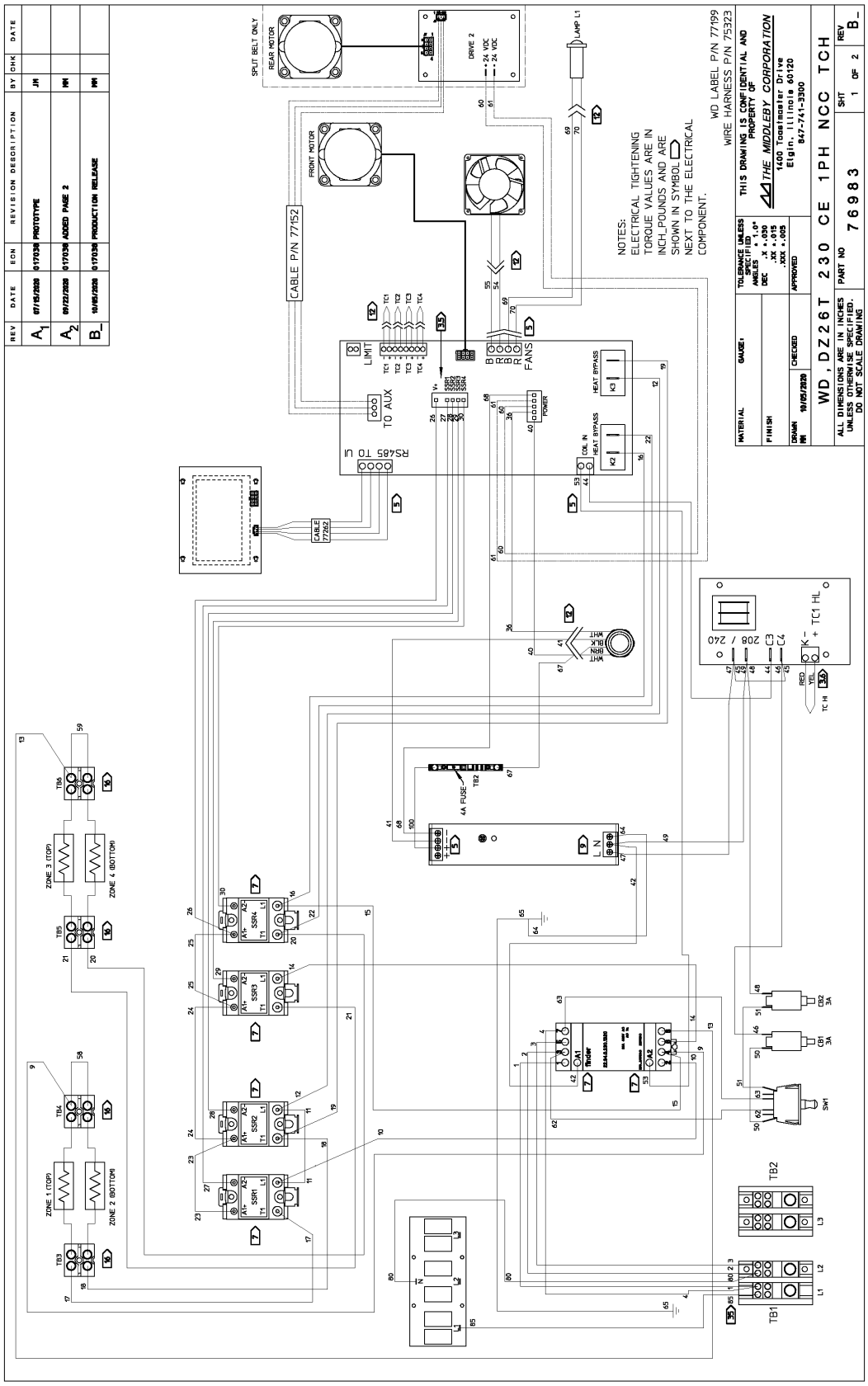

FOR REVISIONS SEE SHEET 1

INTERNATIONAL							
AC VOLTS	PHASE	Hz	CONNECTED KW	AVG OPERATING KW	CONNECTED LOADS (AMPS)			
					L1	L2	L3	N
230	1	50/60	7.3	4.3	32.0	32.0	-	-

TOLERANCE UNLESS SPECIFIED
ANGLES ± 1.0°
DEC .X ±0.030
.XX ±0.015
.XXX ±0.005

DRAWN NM 09/22/2020
CHECKED
APPROVED VSS 01/07/2021

THIS DRAWING IS CONFIDENTIAL AND PROPERTY OF
THE MIDDLEBY CORPORATION
1400 Toastmaster Drive
Elgin, Illinois 60120
847-741-3300

WD,DZ26T 230 CE 1PH NCC TCH

ALL DIMENSIONS ARE IN INCHES UNLESS OTHERWISE SPECIFIED
DO NOT SCALE DRAWING

PART NO 76983

SHT 2 OF 2

REV B

Wiring Diagram, DZ26T, 380/416V 3PH • 76984 REV B

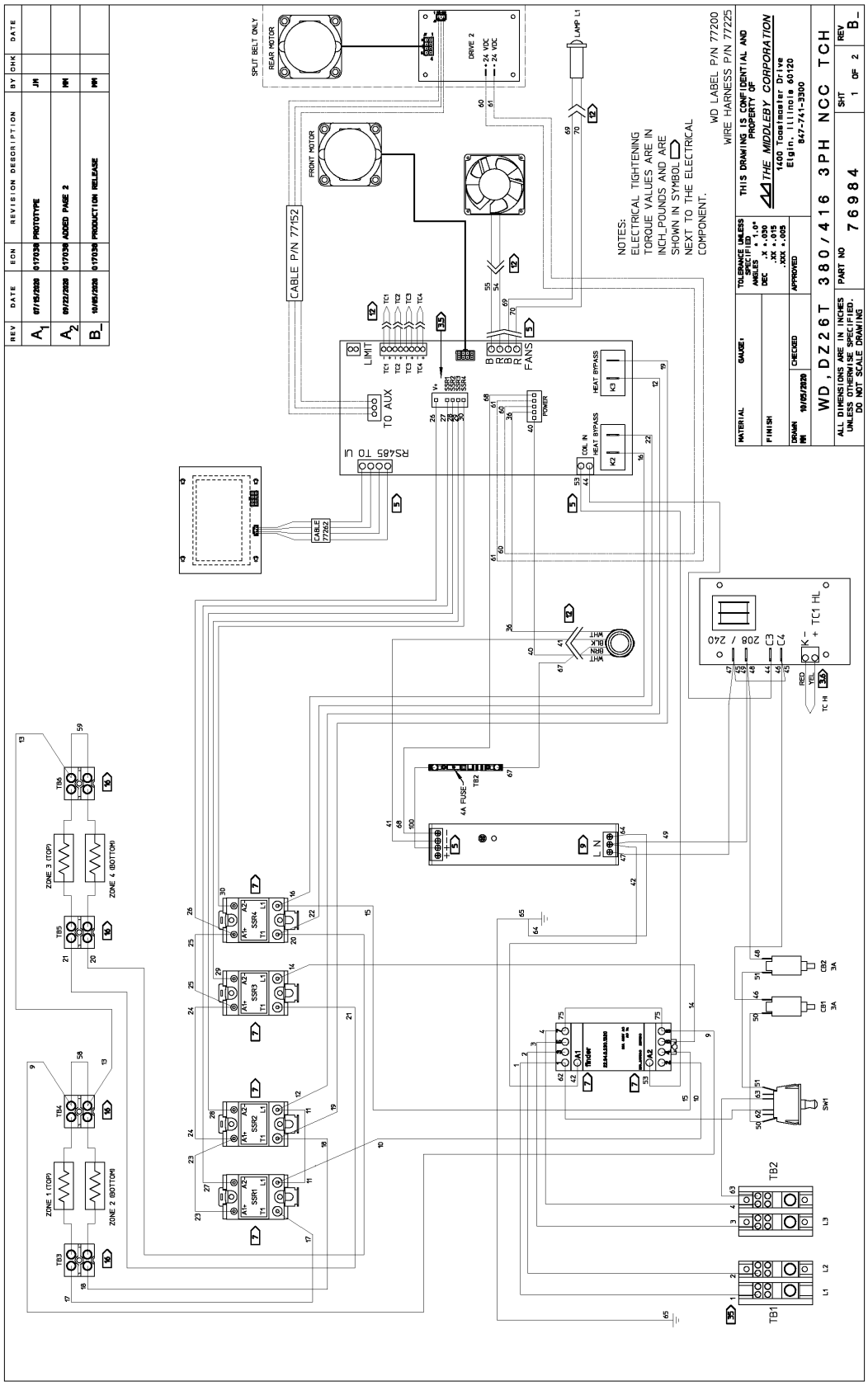

FOR REVISIONS SEE SHEET 1

DOMESTIC								
AC VOLTS	PHASE	Hz	CONNECTED KW	AVG OPERATING KW	CONNECTED LOADS (AMPS)			
					L1	L2	L3	N
380	3	50/60	6.7	4.3	15.3	7.7	7.7	7.7

TOLERANCE UNLESS SPECIFIED
ANGLES ± 1.0°
DEC X ±.030
.XX ±.015
.XXX ±.005

DRAWN MM 09/22/2020
CHECKED
APPROVED WSS 01/07/2021

THIS DRAWING IS CONFIDENTIAL AND PROPERTY OF
THE MIDDLEBY CORPORATION
1400 Toastmaster Drive
Elgin, Illinois 60120
847-741-3300

WD,DZ26T 380/416 3PH NCC TCH

ALL DIMENSIONS ARE IN INCHES UNLESS OTHERWISE SPECIFIED. DO NOT SCALE DRAWING

PART NO 76984

SHT 2 OF 2

REV B

Wiring Diagram, DZ33T, E208-240V 3PH • 77316 REV B

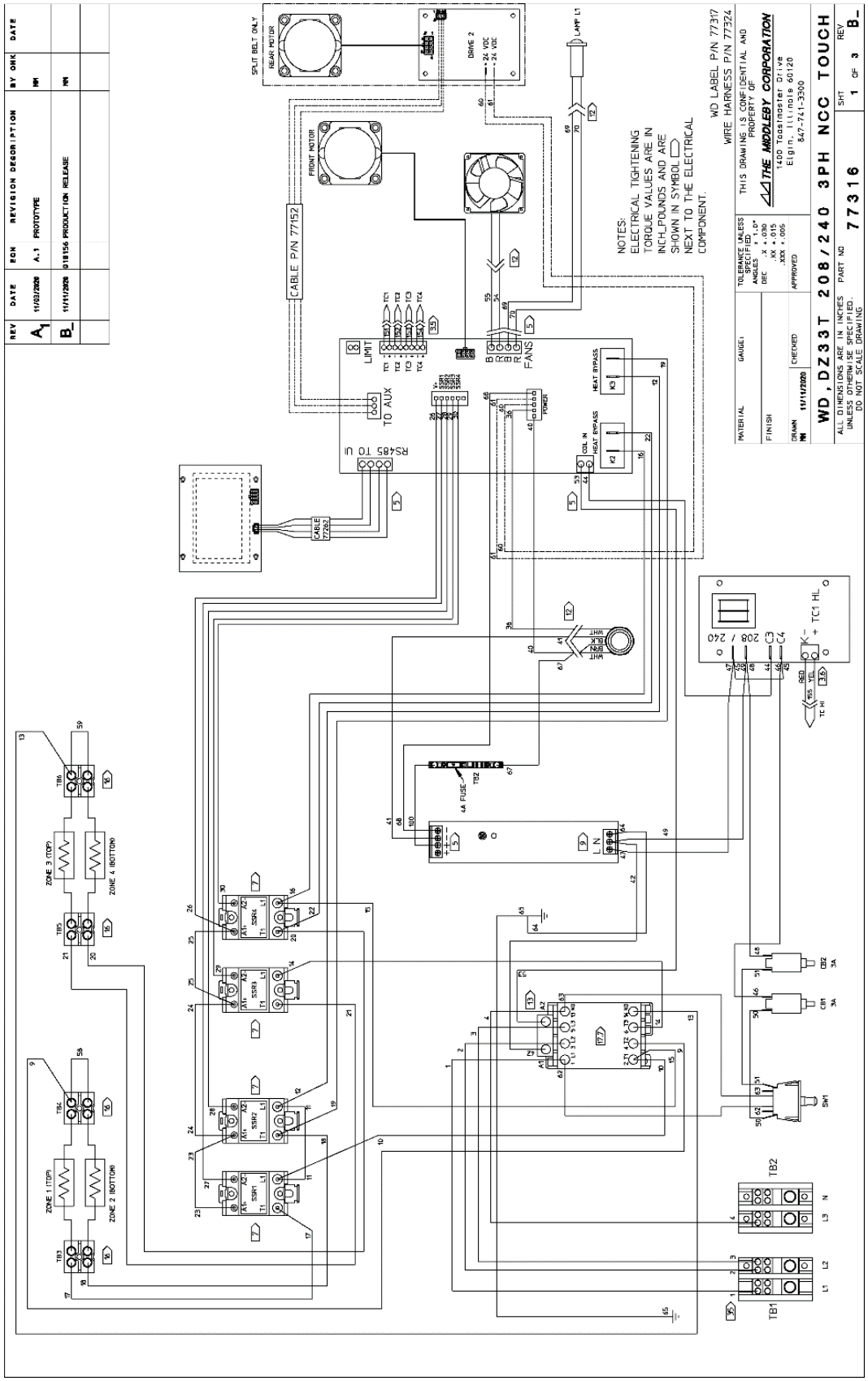

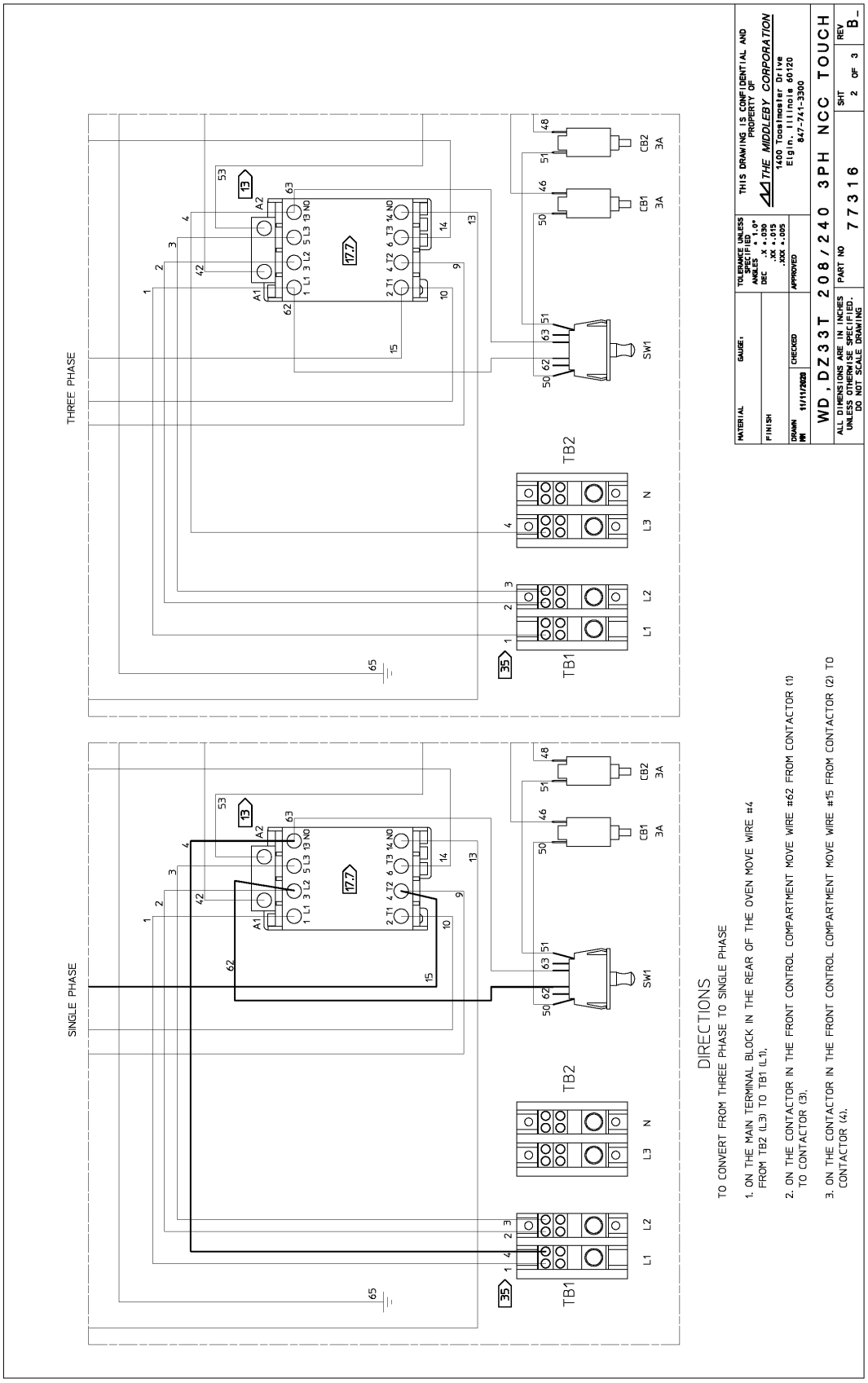
THREE PHASE
SINGLE PHASE
TB1
TB2
SW1
CB1 3A
CB2 3A
DIRECTIONS
TO CONVERT FROM THREE PHASE TO SINGLE PHASE
1. ON THE MAIN TERMINAL BLOCK IN THE REAR OF THE OVEN MOVE WIRE #4 FROM TB2 (L3) TO TB1 (L1).
2. ON THE CONTACTOR IN THE FRONT CONTROL COMPARTMENT MOVE WIRE #62 FROM CONTACTOR (1) TO CONTACTOR (3).
3. ON THE CONTACTOR IN THE FRONT CONTROL COMPARTMENT MOVE WIRE #15 FROM CONTACTOR (2) TO CONTACTOR (4).
THIS DRAWING IS CONFIDENTIAL AND PROPERTY OF
THE MIDDLEBY CORPORATION
1400 Toastmaster Drive
Elgin, Illinois 60120
847-741-3300
WD, DZ33T 208/240 3PH NCC TOUCH
PART NO 77316
SHT 2 OF 3
REV B_
ALL DIMENSIONS ARE IN INCHES UNLESS OTHERWISE SPECIFIED. DO NOT SCALE DRAWING

FOR REVISIONS SEE SHEET 1

900°F	VOLTAGE	208V				240V			
	AMPERAGE	L1	L2	L3	WATTAGE	L1	L2	L3	WATTAGE
PHASE 1 W/O ENERGY MANAGEMENT		45.7	45.7	-	9.5	41.7	41.7	-	10.0
PHASE 1 WITH ENERGY MANAGEMENT		32.0	32.0	-	7.7	28.0	28.0	-	7.6
PHASE 3 W/O ENERGY MANAGEMENT		30.3	30.3	19.8	9.5	27.6	27.6	18.1	10.0
PHASE 3 WITH ENERGY MANAGEMENT		26.0	26.0	19.0	7.5	23.0	23.0	17.0	7.9

TOLERANCE UNLESS SPECIFIED ANGLES ± 1.0° DEC .X ±.030 .XX ±.015 .XXX ±.005	DRAWN MM 11/11/2020 CHECKED APPROVED	THIS DRAWING IS CONFIDENTIAL AND PROPERTY OF THE MIDDLEBY CORPORATION 1400 Toastmaster Drive Elgin, Illinois 60120 847-741-3300
WD,DZ33T 208/240 3PH NCC TOUCH		
ALL DIMENSIONS ARE IN INCHES UNLESS OTHERWISE SPECIFIED. DO NOT SCALE DRAWING	PART NO 77316	SHT 3 OF 3 / REV B

Wiring Diagram, DZ33T, 380V 3PH CE • 77318 REV B

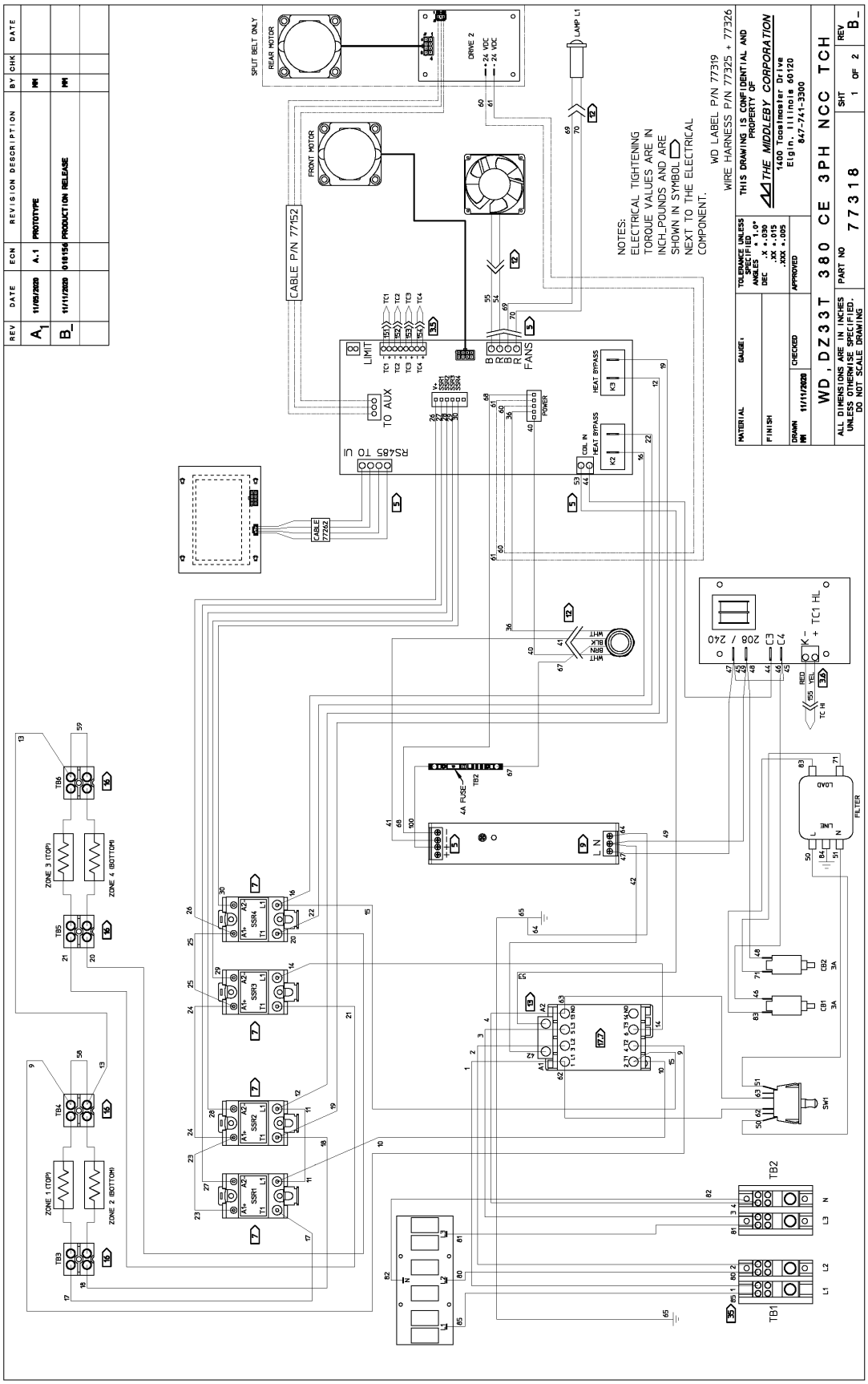

FOR REVISIONS SEE SHEET 1

900°F	VOLTAGE	380V				
	AMPERAGE	L1	L2	L3	N	WATTAGE
PHASE 1 W/O ENERGY MANAGEMENT		-	-	-	-	-
PHASE 1 WITH ENERGY MANAGEMENT		-	-	-	-	-
PHASE 3 W/O ENERGY MANAGEMENT		18.9	9.2	9.2	9.2	8.4
PHASE 3 WITH ENERGY MANAGEMENT		18.0	9.0	9.0	9.0	6.8

TOLERANCE UNLESS SPECIFIED ANGLES ± 1.0° DEC .X ±.030 .XX ±.015 .XXX ±.005	DRAWN MM 11/11/2020 CHECKED APPROVED	THIS DRAWING IS CONFIDENTIAL AND PROPERTY OF THE MIDDLEBY CORPORATION 1400 Toastmaster Drive Elgin, Illinois 60120 847-741-3300
WD,DZ33T 380 CE 3PH NCC TCH		
ALL DIMENSIONS ARE IN INCHES UNLESS OTHERWISE SPECIFIED. DO NOT SCALE DRAWING	PART NO 77318	SHT 2 OF 2 / REV B

Wiring Diagram, DZ33T, 230V 1PH CE • 77320 REV B

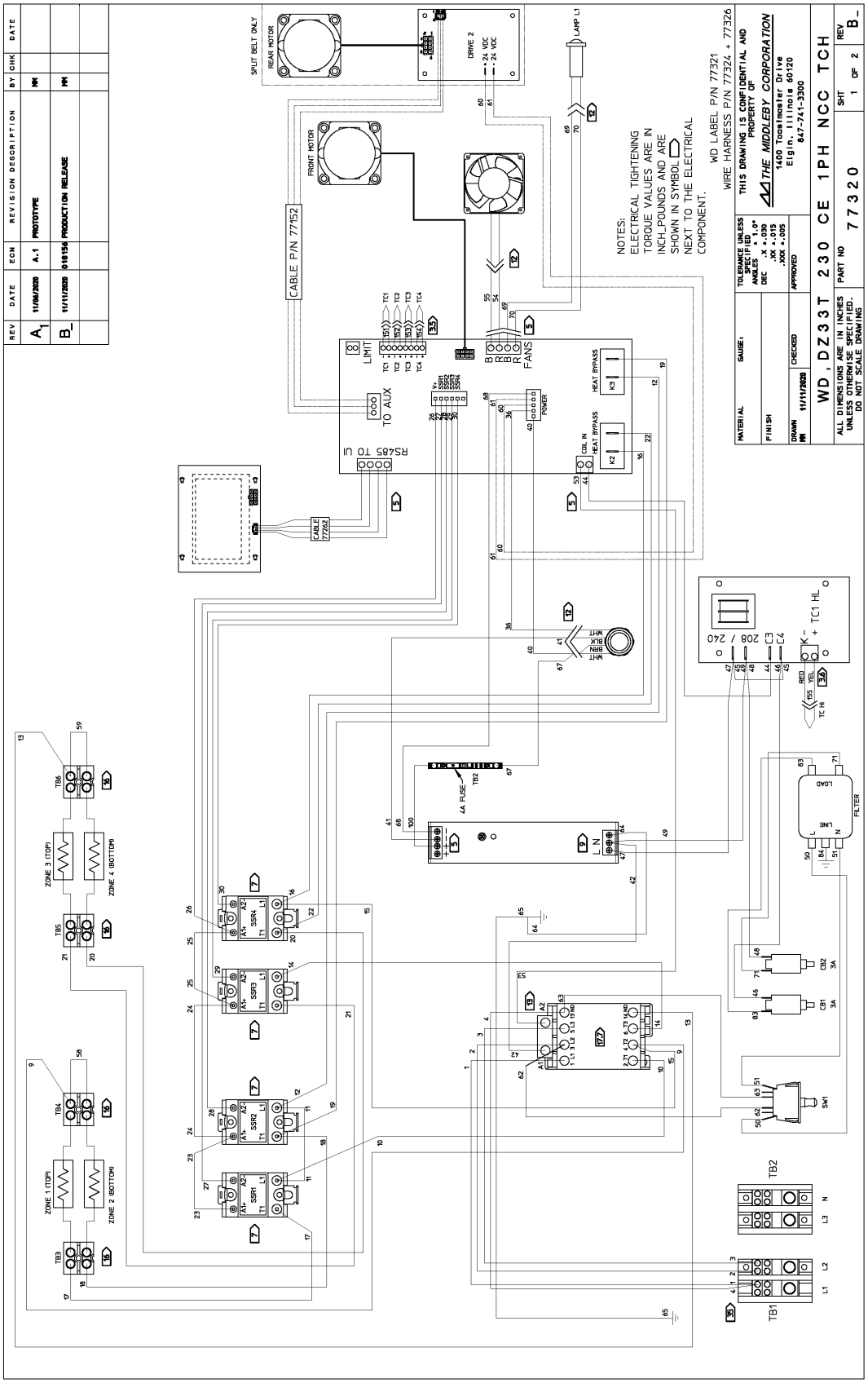

FOR REVISIONS SEE SHEET 1

INTERNATIONAL

	AC VOLTS	PHASE	Hz	CONNECTED KW	CONNECTED LOADS (AMPS)			
					L1	L2	L3	N
W/O ENERGY MANAGEMENT	230	1	50/60	6.9	30.0	30.0	-	-
W/ ENERGY MANAGEMENT	230	1	50/60	9.2	40.0	40.0	-	-

TOLERANCE UNLESS SPECIFIED
ANGLES ± 1.0°
DEC .X ±.030
.XX ±.015
.XXX ±.005

DRAWN MM 11/11/2020
CHECKED
APPROVED

THIS DRAWING IS CONFIDENTIAL AND PROPERTY OF
THE MIDDLEBY CORPORATION
1400 Toastmaster Drive
Elgin, Illinois 60120
847-741-3300

WD, DZ33T 230 CE 1PH NCC TCH

ALL DIMENSIONS ARE IN INCHES UNLESS OTHERWISE SPECIFIED. DO NOT SCALE DRAWING

PART NO 77320

SHT 2 OF 2

REV B

Wiring Diagram, DZ33T, 380/416V 3PH • 77322 REV B

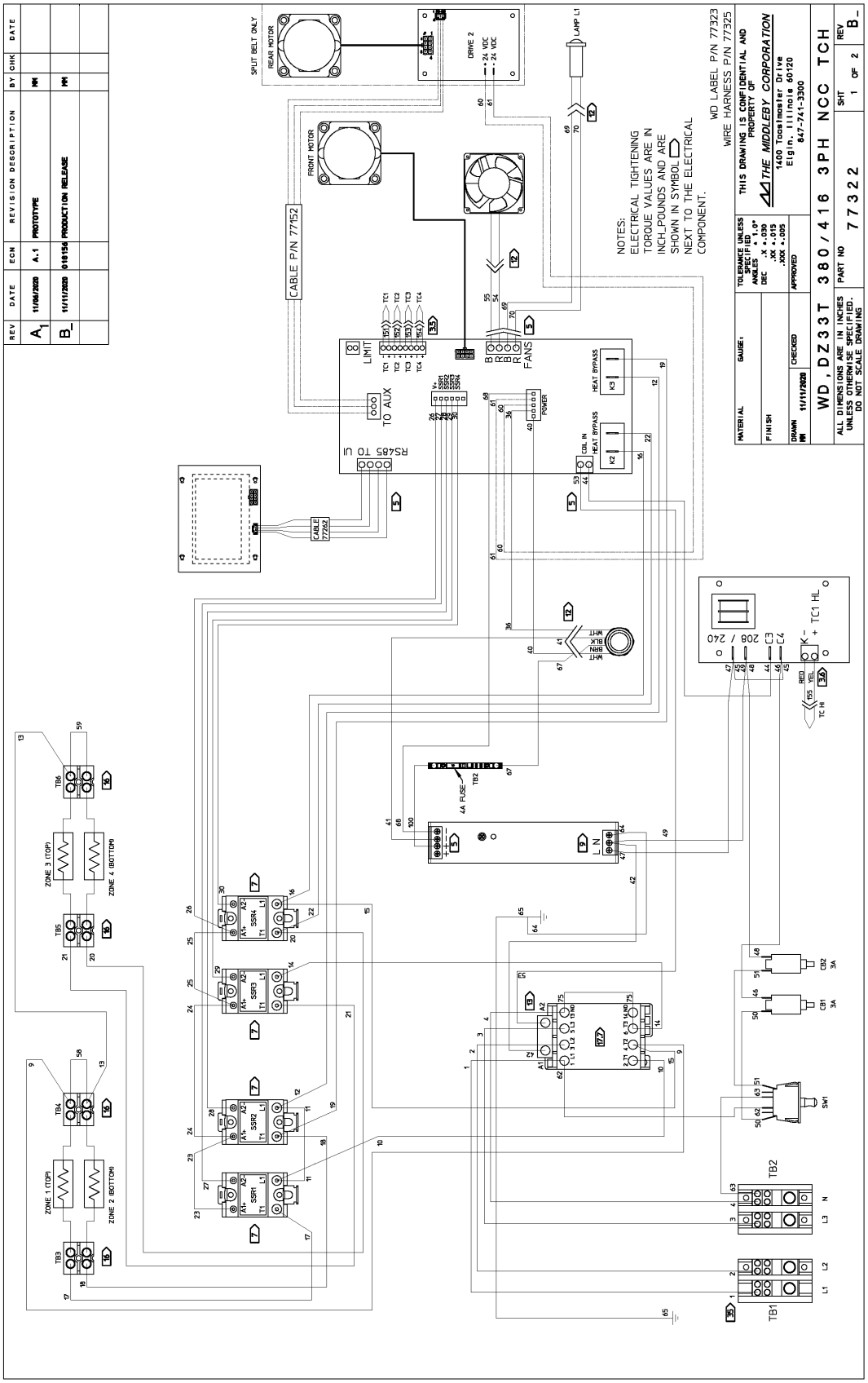

FOR REVISIONS SEE SHEET 1

900°F	VOLTAGE	380V					416V				
	AMPERAGE	L1	L2	L3	N	WATTAGE	L1	L2	L3	N	WATTAGE
PHASE 1 W/O ENERGY MANAGEMENT		-	-	-	-	-	-	-	-	-	-
PHASE 1 WITH ENERGY MANAGEMENT		-	-	-	-	-	-	-	-	-	-
PHASE 3 W/O ENERGY MANAGEMENT		18.9	9.2	9.2	9.2	8.4	20.8	10.4	10.4	10.4	10.0
PHASE 3 WITH ENERGY MANAGEMENT		18.0	9.0	9.0	9.0	6.8	19.0	10.0	10.0	10.0	7.7

TOLERANCE UNLESS SPECIFIED ANGLES ± 1.0° DEC .X ±.030 .XX ±.015 .XXX ±.005	DRAWN MM 11/11/2020 CHECKED APPROVED	THIS DRAWING IS CONFIDENTIAL AND PROPERTY OF THE MIDDLEBY CORPORATION 1400 Toastmaster Drive Elgin, Illinois 60120 847-741-3300
WD,DZ33T 380/416 3PH NCC TCH		
ALL DIMENSIONS ARE IN INCHES UNLESS OTHERWISE SPECIFIED. DO NOT SCALE DRAWING	PART NO 77322	SHT 2 OF 2 / REV B

Wiring Diagram, DZ55T, 208/240 3PH • 78726 REV B

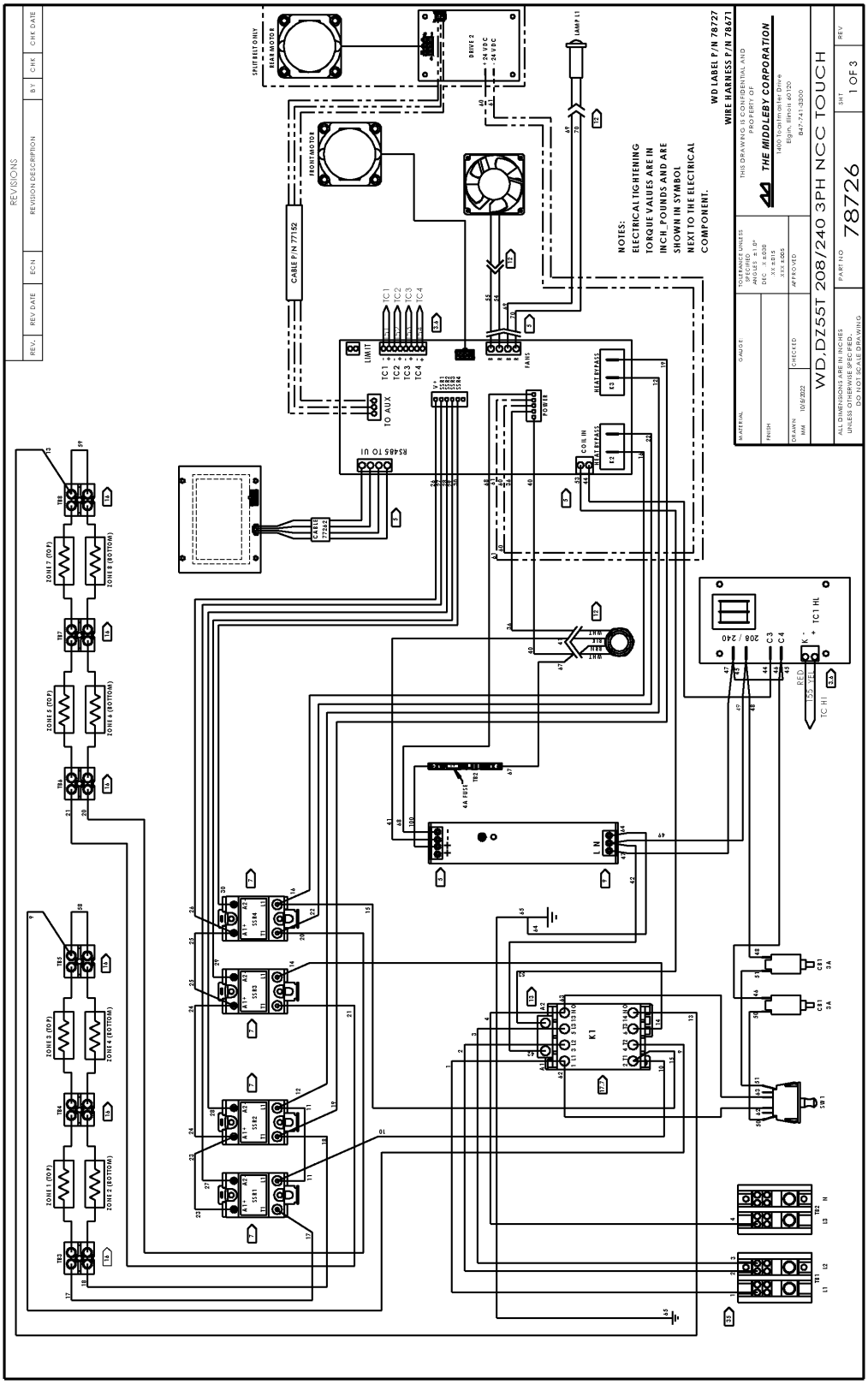

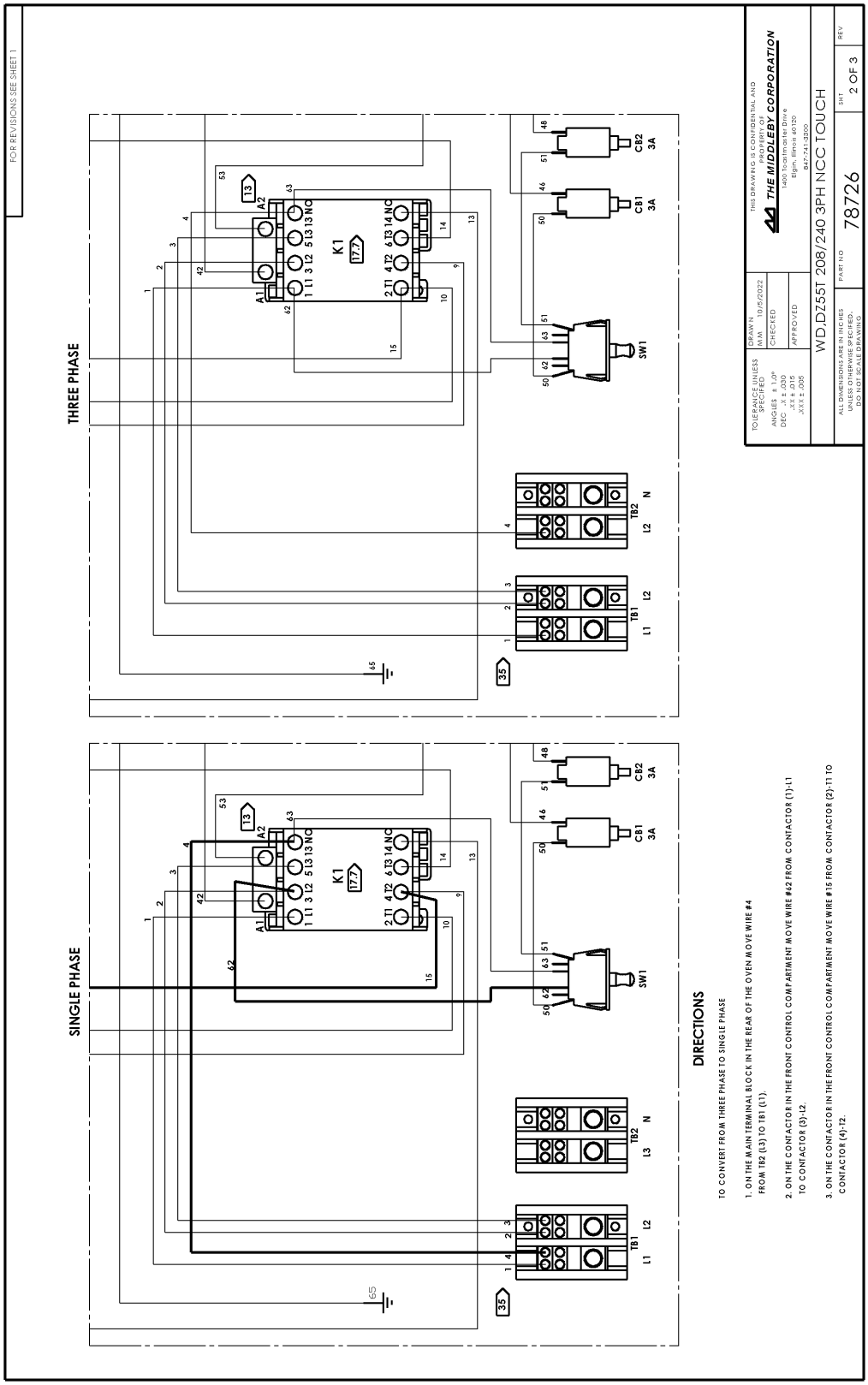
FOR REVISIONS SEE SHEET 1
THREE PHASE
SINGLE PHASE
K1
17.7
A1
A2
1 L1 3 L2 5 L3 13 NO
2 T1 4 T2 6 T3 14 NO
CB1 3A
CB2 3A
SW1
TB1 L1 L2
TB2 L2 N
TB2 L3 N
DIRECTIONS
TO CONVERT FROM THREE PHASE TO SINGLE PHASE
1. ON THE MAIN TERMINAL BLOCK IN THE REAR OF THE OVEN MOVE WIRE #4 FROM TB2 (L3) TO TB1 (L1).
2. ON THE CONTACTOR IN THE FRONT CONTROL COMPARTMENT MOVE WIRE #62 FROM CONTACTOR (1)-L1 TO CONTACTOR (3)-L2.
3. ON THE CONTACTOR IN THE FRONT CONTROL COMPARTMENT MOVE WIRE #15 FROM CONTACTOR (2)-T1 TO CONTACTOR (4)-T2.
TOLERANCE UNLESS SPECIFIED
ANGLES ± 1.0°
DEC .X ± .030
.XX ± .015
.XXX ± .005
DRAWN MM 10/5/2022
CHECKED
APPROVED
THIS DRAWING IS CONFIDENTIAL AND PROPERTY OF
THE MIDDLEBY CORPORATION
1400 Toastmaster Drive
Elgin, Illinois 60120
847-741-3300
WD.DZ55T 208/240 3PH NCC TOUCH
ALL DIMENSIONS ARE IN INCHES UNLESS OTHERWISE SPECIFIED. DO NOT SCALE DRAWING
PART NO 78726
SHT 2 OF 3
REV

FOR REVISIONS SEE SHEET 1

900±F	VOLTAGE	208V				240V			
	AMPERAGE	L1	L2	L3	KW	L1	L2	L3	KW
PHASE 1 W/O ENERGY MANAGEMENT		90.7	92.5	-	20.0	76.5	76.6	-	20.0
PHASE 1 WITH ENERGY MANAGEMENT		40.4	40.2	-	17.4	38.4	38.3	-	18.3
PHASE 3 W/O ENERGY MANAGEMENT		60.8	63.0	40.5	20.0	51.1	51.8	33.7	20.0
PHASE 3 WITH ENERGY MANAGEMENT		29.4	26.7	19.5	17.4	27.5	25.4	17.7	18.3

TOLERANCE UNLESS SPECIFIED
ANGLES ± 1.0°
DEC .X ± .030
.XX ± .015
.XXX ± .005

DRAWN M.M. 10/5/2022
CHECKED
APPROVED

THIS DRAWING IS CONFIDENTIAL AND PROPERTY OF
THE MIDDLEBY CORPORATION
1400 Toastmaster Drive
Elgin, Illinois 60120
847-741-3300

WD,DZ55T 208/240 3PH NCC TOUCH

ALL DIMENSIONS ARE IN INCHES UNLESS OTHERWISE SPECIFIED.
DO NOT SCALE DRAWING

PART NO 78726
SHT 3 OF 3
REV

Wiring Diagram, DZ55T, 380V 3PH CE • 78728

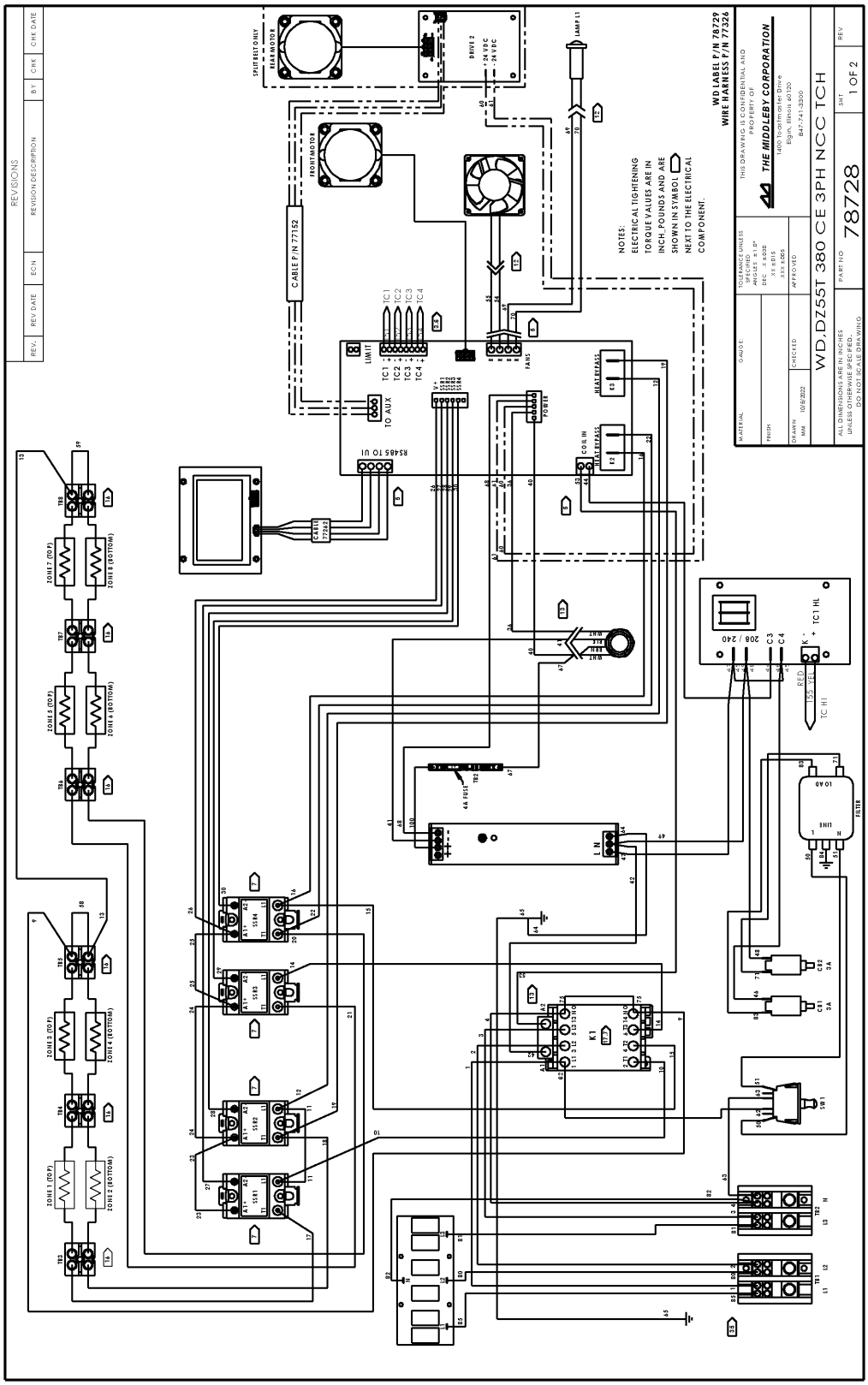

FOR REVISIONS SEE SHEET 1

900±F	VOLTAGE	380V				
	AMPERAGE	L1	L2	L3	N	WATTAGE
PHASE 1 W/O ENERGY MANAGEMENT		-	-	-	-	-
PHASE 1 WITH ENERGY MANAGEMENT		-	-	-	-	-
PHASE 3 W/O ENERGY MANAGEMENT		36.0	18.5	18.5	17.5	16.8
PHASE 3 WITH ENERGY MANAGEMENT		20.2	10.6	8.6	10.6	15.1

TOLERANCE UNLESS SPECIFIED ANGLES ± 1.0° DEC .X ± .030 .XX ± .015 .XXX ± .005	DRAWN MM 10/5/2022 CHECKED APPROVED	THIS DRAWING IS CONFIDENTIAL AND PROPERTY OF THE MIDDLEBY CORPORATION 1400 Toastmaster Drive Elgin, Illinois 60120 847-741-3300
WD,DZ55T 380 CE 3PH NCC TCH		
ALL DIMENSIONS ARE IN INCHES UNLESS OTHERWISE SPECIFIED. DO NOT SCALE DRAWING	PART NO 78728	SHT 2 OF 2 / REV

Wiring Diagram, DZ55T, 230V 1PH CE • 78730

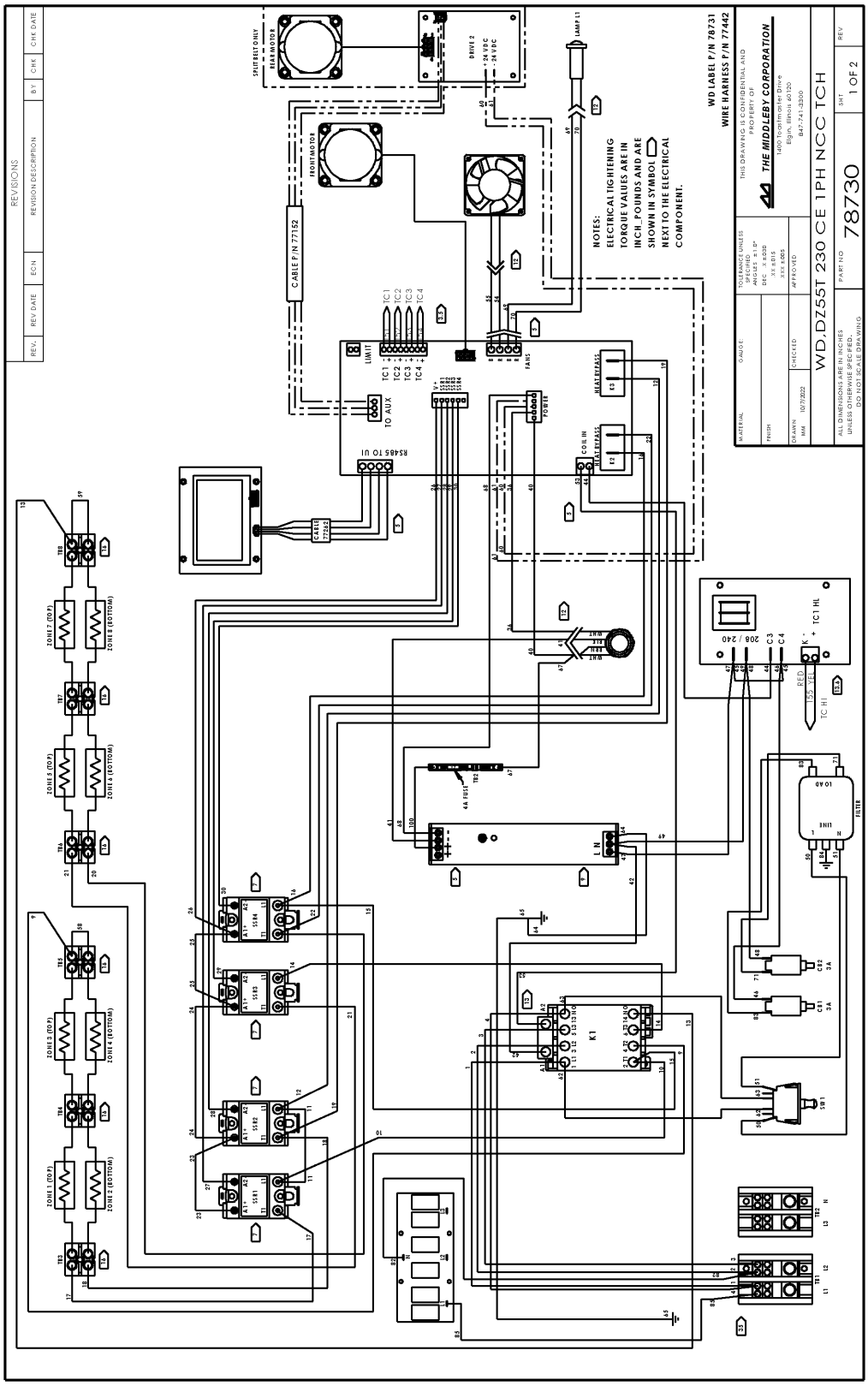

FOR REVISIONS SEE SHEET 1

INTERNATIONAL								
	AC VOLTS	PHASE	Hz	CONNECTED KW	CONNECTED LOADS (AMPS)			
					L1	L2	L3	N
W/O ENERGY MANAGEMENT	230	1	50/60	6.9	30.0	30.0	-	-
W/ ENERGY MANAGEMENT	230	1	50/60	9.2	40.0	40.0	-	-

TOLERANCE UNLESS SPECIFIED
ANGLES ± 1.0°
DEC .X ± .030
.XX ± .015
.XXX ± .005

DRAWN M.M. 10/7/2022
CHECKED
APPROVED

THIS DRAWING IS CONFIDENTIAL AND PROPERTY OF
THE MIDDLEBY CORPORATION
1400 Toastmaster Drive
Elgin, Illinois 60120
847-741-3300

WD,DZ55T 230 CE 1PH NCC TCH

ALL DIMENSIONS ARE IN INCHES UNLESS OTHERWISE SPECIFIED. DO NOT SCALE DRAWING

PART NO 78730

SHT 2 OF 2

REV

Wiring Diagram, DZ55T, 380/416V 3PH • 78732

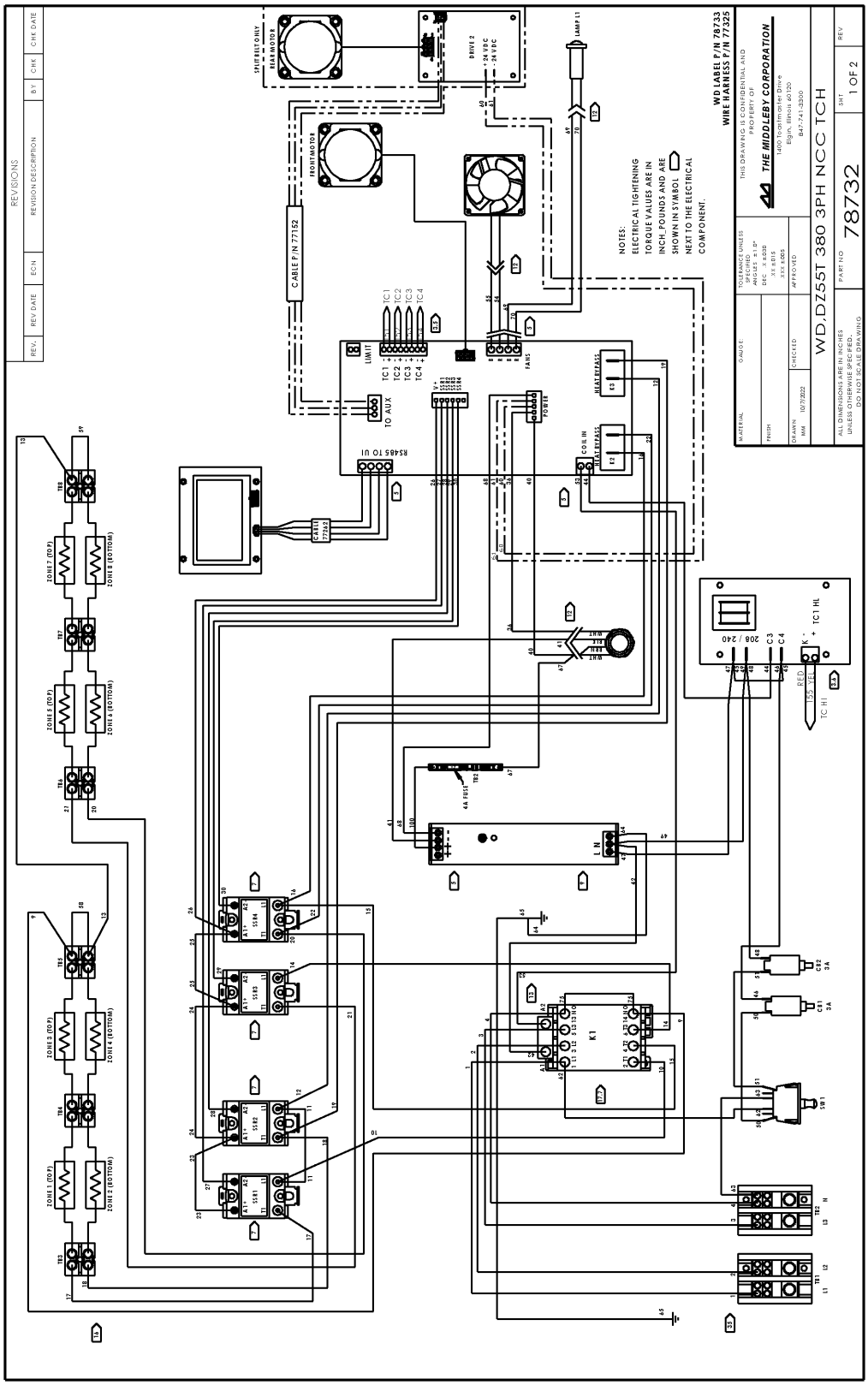

FOR REVISIONS SEE SHEET 1

900±F	VOLTAGE	380V				
	AMPERAGE	L1	L2	L3	N	WATTAGE
PHASE 1 W/O ENERGY MANAGEMENT		-	-	-	-	-
PHASE 1 WITH ENERGY MANAGEMENT		-	-	-	-	-
PHASE 3 W/O ENERGY MANAGEMENT		36.0	18.5	18.5	17.5	16.8
PHASE 3 WITH ENERGY MANAGEMENT		20.2	10.6	8.6	10.6	15.1

TOLERANCE UNLESS SPECIFIED
ANGLES ± 1.0°
DEC .X ± .030
.XX ± .015
.XXX ± .005

DRAWN M.M. 10/7/2022
CHECKED
APPROVED

THIS DRAWING IS CONFIDENTIAL AND PROPERTY OF
THE MIDDLEBY CORPORATION
1400 Toastmaster Drive
Elgin, Illinois 60120
847-741-3300

WD,DZ55T 380 3PH NCC TCH

ALL DIMENSIONS ARE IN INCHES UNLESS OTHERWISE SPECIFIED. DO NOT SCALE DRAWING

PART NO 78732

SHT 2 OF 2

REV

WARNING

Improper installation, adjustment, alteration, service or maintenance can cause property damage, injury or death. Read the installation, operating and maintenance instructions thoroughly before installing or servicing this equipment.

NOTICE

During the warranty period, ALL parts replacement and servicing should be performed by your Middleby Marshall Authorized Service Agent. Service that is performed by parties other than your Middleby Marshall Authorized Service Agent may void your warranty.

NOTICE

Using any parts other than genuine Middleby Marshall factory manufactured parts relieves the manufacturer of all warranty and liability.

NOTICE

Middleby Marshall reserves the right to change specifications at any time.

CFESA

Commercial Food Equipment Service Association

Middleby is proud to support the Commercial Food Equipment Service Association (CFESA). We recognize and applaud CFESA's ongoing efforts to improve the quality of technical service in the industry.

Middleby Cooking Systems Group • 1400 Toastmaster Drive • Elgin, IL 60120 • USA • (847)741-3300 • FAX (847)741-4406

www.middleby.com